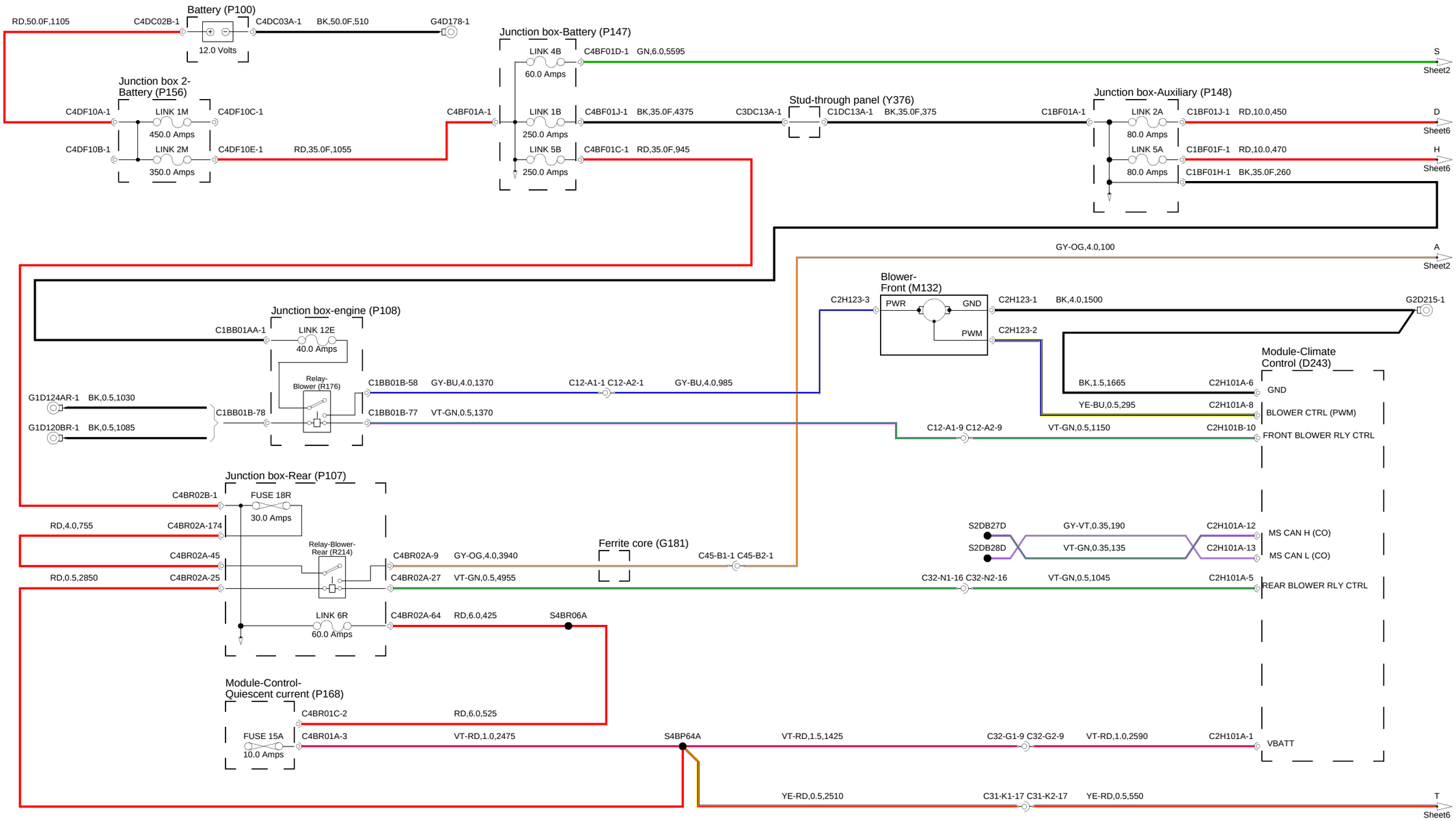
Battery (P100)
RD,50.0F,1105
C4DC02B-1
C4DC03A-1
BK,50.0F,510
G4D178-1
12.0 Volts
Junction box-Battery (P147)
LINK 4B
60.0 Amps
C4BF01D-1
GN,6.0,5595
S
Sheet2
Junction box 2-Battery (P156)
C4DF10A-1
LINK 1M
450.0 Amps
C4DF10C-1
C4DF10B-1
LINK 2M
350.0 Amps
C4DF10E-1
RD,35.0F,1055
C4BF01A-1
LINK 1B
250.0 Amps
C4BF01J-1
BK,35.0F,4375
C3DC13A-1
Stud-through panel (Y376)
C1DC13A-1
BK,35.0F,375
C1BF01A-1
Junction box-Auxiliary (P148)
LINK 2A
80.0 Amps
C1BF01J-1
RD,10.0,450
D
Sheet6
LINK 5B
250.0 Amps
C4BF01C-1
RD,35.0F,945
LINK 5A
80.0 Amps
C1BF01F-1
RD,10.0,470
H
Sheet6
C1BF01H-1
BK,35.0F,260
GY-OG,4.0,100
A
Sheet2
Blower-Front (M132)
C2H123-3
PWR
GND
PWM
C2H123-1
BK,4.0,1500
G2D215-1
C2H123-2
Junction box-engine (P108)
C1BB01AA-1
LINK 12E
40.0 Amps
Relay-Blower (R176)
C1BB01B-58
GY-BU,4.0,1370
C12-A1-1 C12-A2-1
GY-BU,4.0,985
G1D124AR-1
BK,0.5,1030
C1BB01B-78
G1D120BR-1
BK,0.5,1085
C1BB01B-77
VT-GN,0.5,1370
Module-Climate Control (D243)
BK,1.5,1665
C2H101A-6
GND
YE-BU,0.5,295
C2H101A-8
BLOWER CTRL (PWM)
C12-A1-9 C12-A2-9
VT-GN,0.5,1150
C2H101B-10
FRONT BLOWER RLY CTRL
Junction box-Rear (P107)
C4BR02B-1
FUSE 18R
30.0 Amps
RD,4.0,755
C4BR02A-174
C4BR02A-45
Relay-Blower-Rear (R214)
C4BR02A-9
GY-OG,4.0,3940
Ferrite core (G181)
C45-B1-1 C45-B2-1
S2DB27D
GY-VT,0.35,190
C2H101A-12
MS CAN H (CO)
S2DB28D
VT-GN,0.35,135
C2H101A-13
MS CAN L (CO)
RD,0.5,2850
C4BR02A-25
C4BR02A-27
VT-GN,0.5,4955
C32-N1-16 C32-N2-16
VT-GN,0.5,1045
C2H101A-5
REAR BLOWER RLY CTRL
LINK 6R
60.0 Amps
C4BR02A-64
RD,6.0,425
S4BR06A
Module-Control-Quiescent current (P168)
C4BR01C-2
RD,6.0,525
FUSE 15A
10.0 Amps
C4BR01A-3
VT-RD,1.0,2475
S4BP64A
VT-RD,1.5,1425
C32-G1-9 C32-G2-9
VT-RD,1.0,2590
C2H101A-1
VBATT
YE-RD,0.5,2510
C31-K1-17 C31-K2-17
YE-RD,0.5,550
T
Sheet6

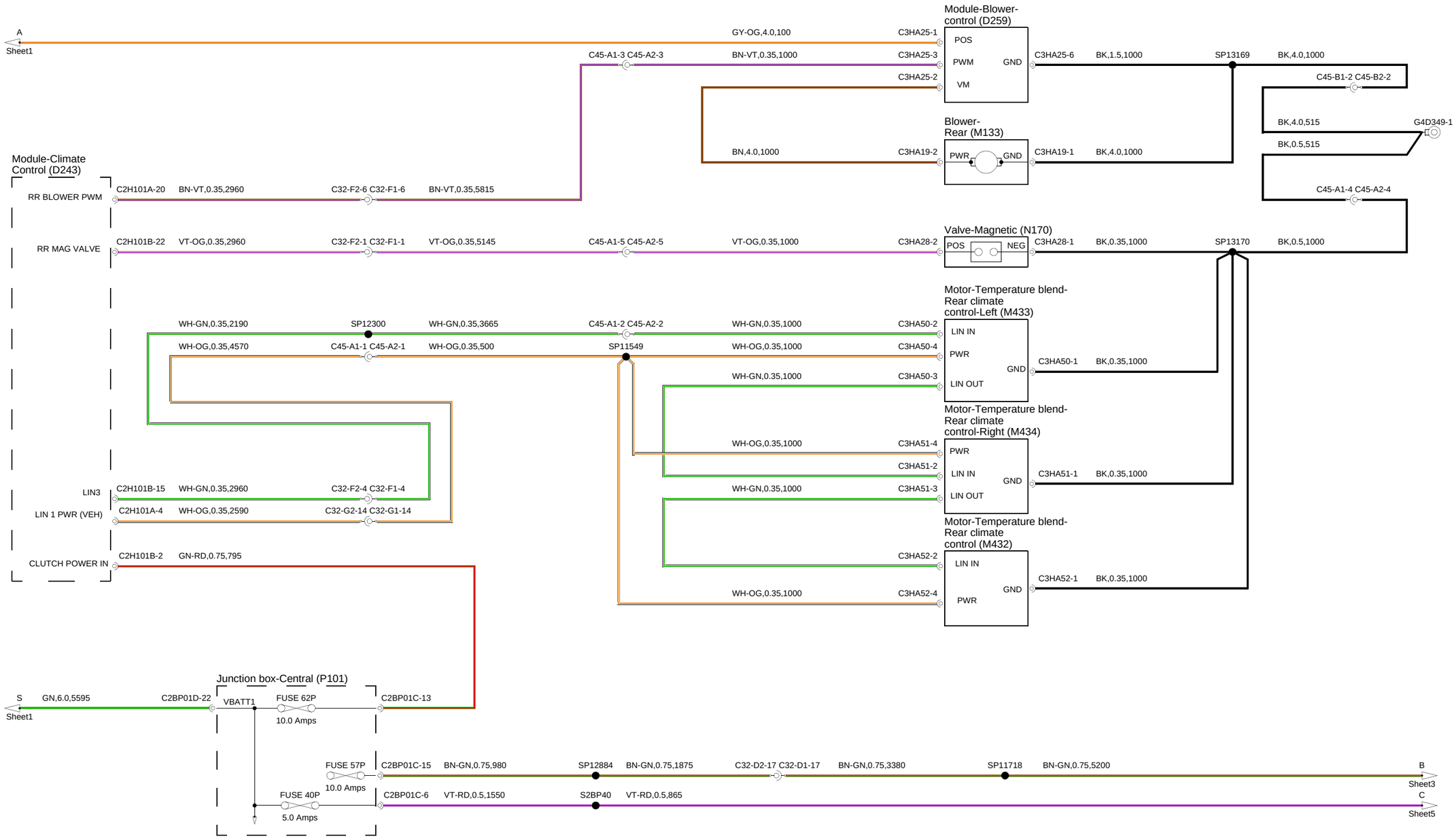
Module-Blower-control (D259)
POS
PWM
GND
VM
Blower-Rear (M133)
PWR
GND
Module-Climate Control (D243)
RR BLOWER PWM
RR MAG VALVE
LIN3
LIN 1 PWR (VEH)
CLUTCH POWER IN
Valve-Magnetic (N170)
POS
NEG
Motor-Temperature blend-Rear climate control-Left (M433)
LIN IN
PWR
GND
LIN OUT
Motor-Temperature blend-Rear climate control-Right (M434)
PWR
LIN IN
GND
LIN OUT
Motor-Temperature blend-Rear climate control (M432)
LIN IN
GND
PWR
Junction box-Central (P101)
VBATT1
FUSE 62P
10.0 Amps
FUSE 57P
10.0 Amps
FUSE 40P
5.0 Amps
Sheet1
Sheet3
Sheet5

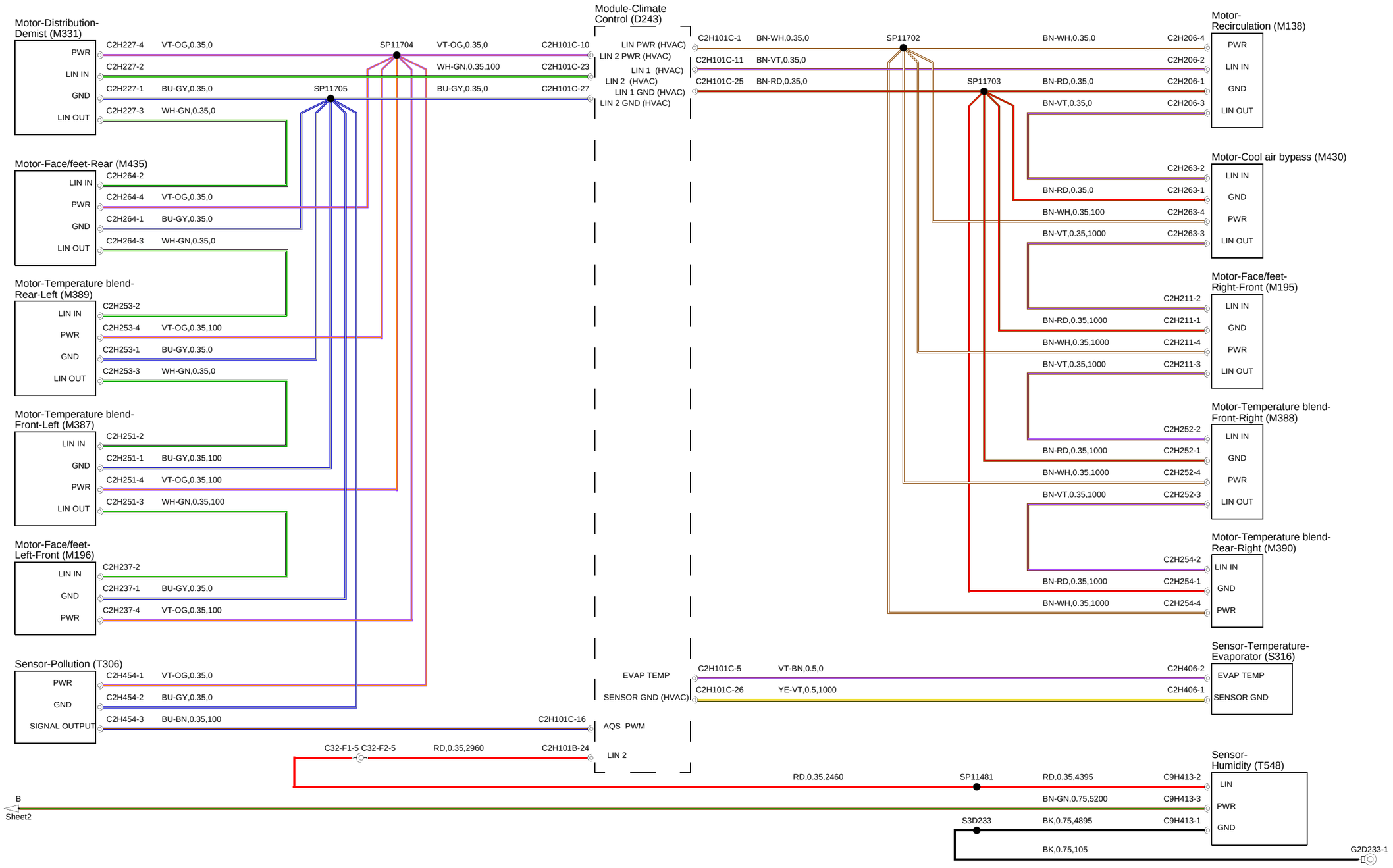
Module-Climate Control (D243)
Motor-Distribution-Demist (M331)
PWR
LIN IN
GND
LIN OUT
C2H227-4 VT-OG,0.35,0
C2H227-2
C2H227-1 BU-GY,0.35,0
C2H227-3 WH-GN,0.35,0
SP11704
SP11705
VT-OG,0.35,0 C2H101C-10
WH-GN,0.35,100 C2H101C-23
BU-GY,0.35,0 C2H101C-27
LIN PWR (HVAC)
LIN 2 PWR (HVAC)
LIN 1 (HVAC)
LIN 2 (HVAC)
LIN 1 GND (HVAC)
LIN 2 GND (HVAC)
C2H101C-1 BN-WH,0.35,0
C2H101C-11 BN-VT,0.35,0
C2H101C-25 BN-RD,0.35,0
SP11702
SP11703
Motor-Recirculation (M138)
BN-WH,0.35,0 C2H206-4
C2H206-2
BN-RD,0.35,0 C2H206-1
BN-VT,0.35,0 C2H206-3
Motor-Face/feet-Rear (M435)
C2H264-2
C2H264-4 VT-OG,0.35,0
C2H264-1 BU-GY,0.35,0
C2H264-3 WH-GN,0.35,0
Motor-Cool air bypass (M430)
C2H263-2
BN-RD,0.35,0 C2H263-1
BN-WH,0.35,100 C2H263-4
BN-VT,0.35,1000 C2H263-3
Motor-Temperature blend-Rear-Left (M389)
C2H253-2
C2H253-4 VT-OG,0.35,100
C2H253-1 BU-GY,0.35,0
C2H253-3 WH-GN,0.35,0
Motor-Face/feet-Right-Front (M195)
C2H211-2
BN-RD,0.35,1000 C2H211-1
BN-WH,0.35,1000 C2H211-4
BN-VT,0.35,1000 C2H211-3
Motor-Temperature blend-Front-Left (M387)
C2H251-2
C2H251-1 BU-GY,0.35,100
C2H251-4 VT-OG,0.35,100
C2H251-3 WH-GN,0.35,100
Motor-Temperature blend-Front-Right (M388)
C2H252-2
BN-RD,0.35,1000 C2H252-1
BN-WH,0.35,1000 C2H252-4
BN-VT,0.35,1000 C2H252-3
Motor-Face/feet-Left-Front (M196)
C2H237-2
C2H237-1 BU-GY,0.35,0
C2H237-4 VT-OG,0.35,100
Motor-Temperature blend-Rear-Right (M390)
C2H254-2
BN-RD,0.35,1000 C2H254-1
BN-WH,0.35,1000 C2H254-4
Sensor-Pollution (T306)
C2H454-1 VT-OG,0.35,0
C2H454-2 BU-GY,0.35,0
C2H454-3 BU-BN,0.35,100
SIGNAL OUTPUT
C2H101C-16
AQS PWM
Sensor-Temperature-Evaporator (S316)
EVAP TEMP
SENSOR GND (HVAC)
C2H101C-5 VT-BN,0.5,0
C2H101C-26 YE-VT,0.5,1000
C2H406-2
C2H406-1
C32-F1-5 C32-F2-5
RD,0.35,2960
C2H101B-24
LIN 2
Sensor-Humidity (T548)
RD,0.35,2460
SP11481
RD,0.35,4395 C9H413-2
LIN
BN-GN,0.75,5200 C9H413-3
PWR
S3D233
BK,0.75,4895 C9H413-1
GND
BK,0.75,105
G2D233-1
B
Sheet2

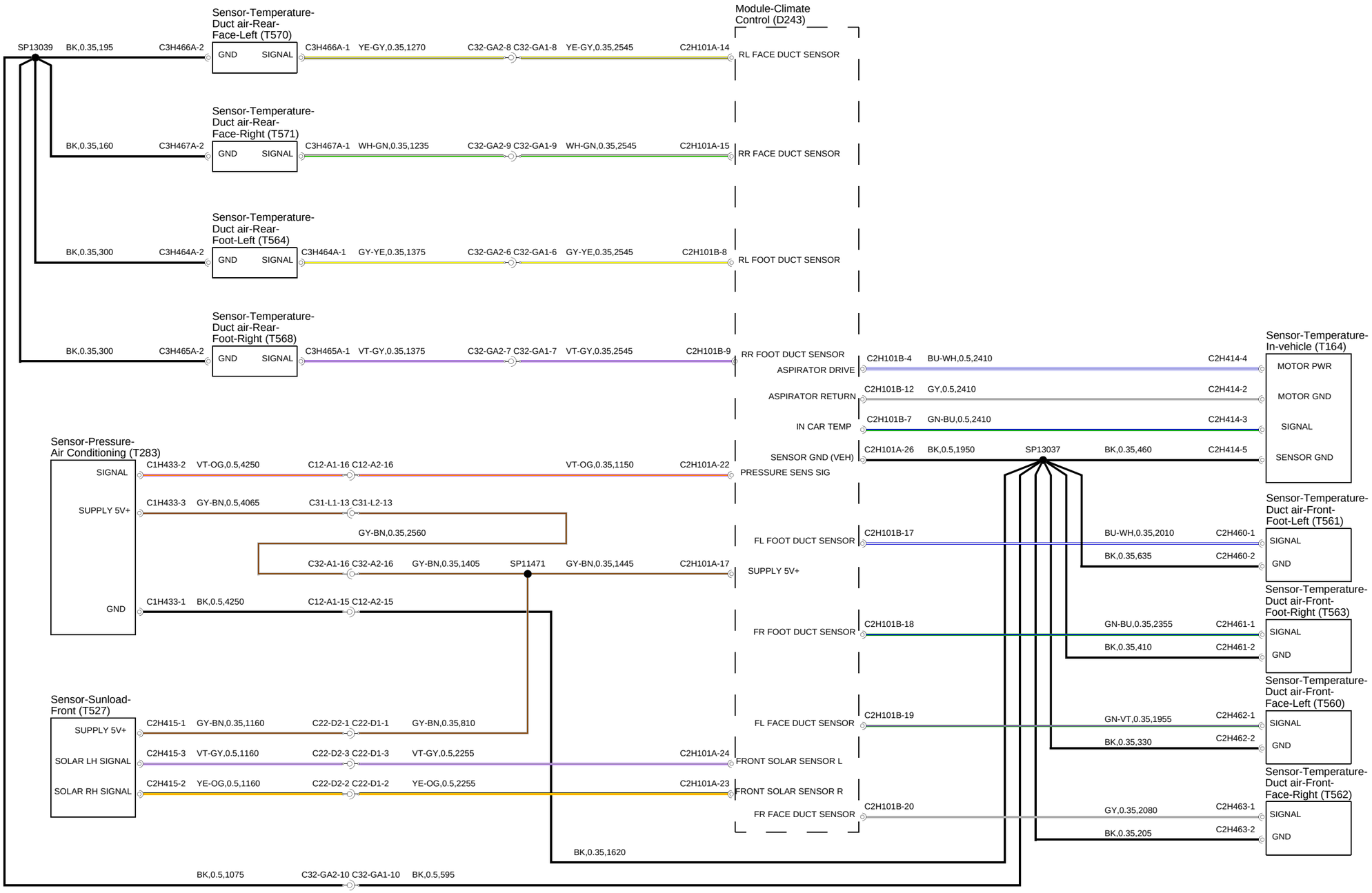
Module-Climate Control (D243)
Sensor-Temperature-Duct air-Rear-Face-Left (T570)
GND
SIGNAL
SP13039
BK,0.35,195
C3H466A-2
C3H466A-1
YE-GY,0.35,1270
C32-GA2-8
C32-GA1-8
YE-GY,0.35,2545
C2H101A-14
RL FACE DUCT SENSOR
Sensor-Temperature-Duct air-Rear-Face-Right (T571)
BK,0.35,160
C3H467A-2
C3H467A-1
WH-GN,0.35,1235
C32-GA2-9
C32-GA1-9
WH-GN,0.35,2545
C2H101A-15
RR FACE DUCT SENSOR
Sensor-Temperature-Duct air-Rear-Foot-Left (T564)
BK,0.35,300
C3H464A-2
C3H464A-1
GY-YE,0.35,1375
C32-GA2-6
C32-GA1-6
GY-YE,0.35,2545
C2H101B-8
RL FOOT DUCT SENSOR
Sensor-Temperature-Duct air-Rear-Foot-Right (T568)
BK,0.35,300
C3H465A-2
C3H465A-1
VT-GY,0.35,1375
C32-GA2-7
C32-GA1-7
VT-GY,0.35,2545
C2H101B-9
RR FOOT DUCT SENSOR
Sensor-Temperature-In-vehicle (T164)
ASPIRATOR DRIVE
C2H101B-4
BU-WH,0.5,2410
C2H414-4
MOTOR PWR
ASPIRATOR RETURN
C2H101B-12
GY,0.5,2410
C2H414-2
MOTOR GND
IN CAR TEMP
C2H101B-7
GN-BU,0.5,2410
C2H414-3
SIGNAL
SENSOR GND (VEH)
C2H101A-26
BK,0.5,1950
SP13037
BK,0.35,460
C2H414-5
SENSOR GND
Sensor-Pressure-Air Conditioning (T283)
SIGNAL
C1H433-2
VT-OG,0.5,4250
C12-A1-16
C12-A2-16
VT-OG,0.35,1150
C2H101A-22
PRESSURE SENS SIG
SUPPLY 5V+
C1H433-3
GY-BN,0.5,4065
C31-L1-13
C31-L2-13
GY-BN,0.35,2560
C32-A1-16
C32-A2-16
GY-BN,0.35,1405
SP11471
GY-BN,0.35,1445
C2H101A-17
SUPPLY 5V+
GND
C1H433-1
BK,0.5,4250
C12-A1-15
C12-A2-15
Sensor-Temperature-Duct air-Front-Foot-Left (T561)
FL FOOT DUCT SENSOR
C2H101B-17
BU-WH,0.35,2010
C2H460-1
BK,0.35,635
C2H460-2
Sensor-Temperature-Duct air-Front-Foot-Right (T563)
FR FOOT DUCT SENSOR
C2H101B-18
GN-BU,0.35,2355
C2H461-1
BK,0.35,410
C2H461-2
Sensor-Temperature-Duct air-Front-Face-Left (T560)
FL FACE DUCT SENSOR
C2H101B-19
GN-VT,0.35,1955
C2H462-1
BK,0.35,330
C2H462-2
Sensor-Sunload-Front (T527)
SUPPLY 5V+
C2H415-1
GY-BN,0.35,1160
C22-D2-1
C22-D1-1
GY-BN,0.35,810
SOLAR LH SIGNAL
C2H415-3
VT-GY,0.5,1160
C22-D2-3
C22-D1-3
VT-GY,0.5,2255
C2H101A-24
FRONT SOLAR SENSOR L
SOLAR RH SIGNAL
C2H415-2
YE-OG,0.5,1160
C22-D2-2
C22-D1-2
YE-OG,0.5,2255
C2H101A-23
FRONT SOLAR SENSOR R
Sensor-Temperature-Duct air-Front-Face-Right (T562)
FR FACE DUCT SENSOR
C2H101B-20
GY,0.35,2080
C2H463-1
BK,0.35,205
C2H463-2
BK,0.35,1620
BK,0.5,1075
C32-GA2-10
C32-GA1-10
BK,0.5,595

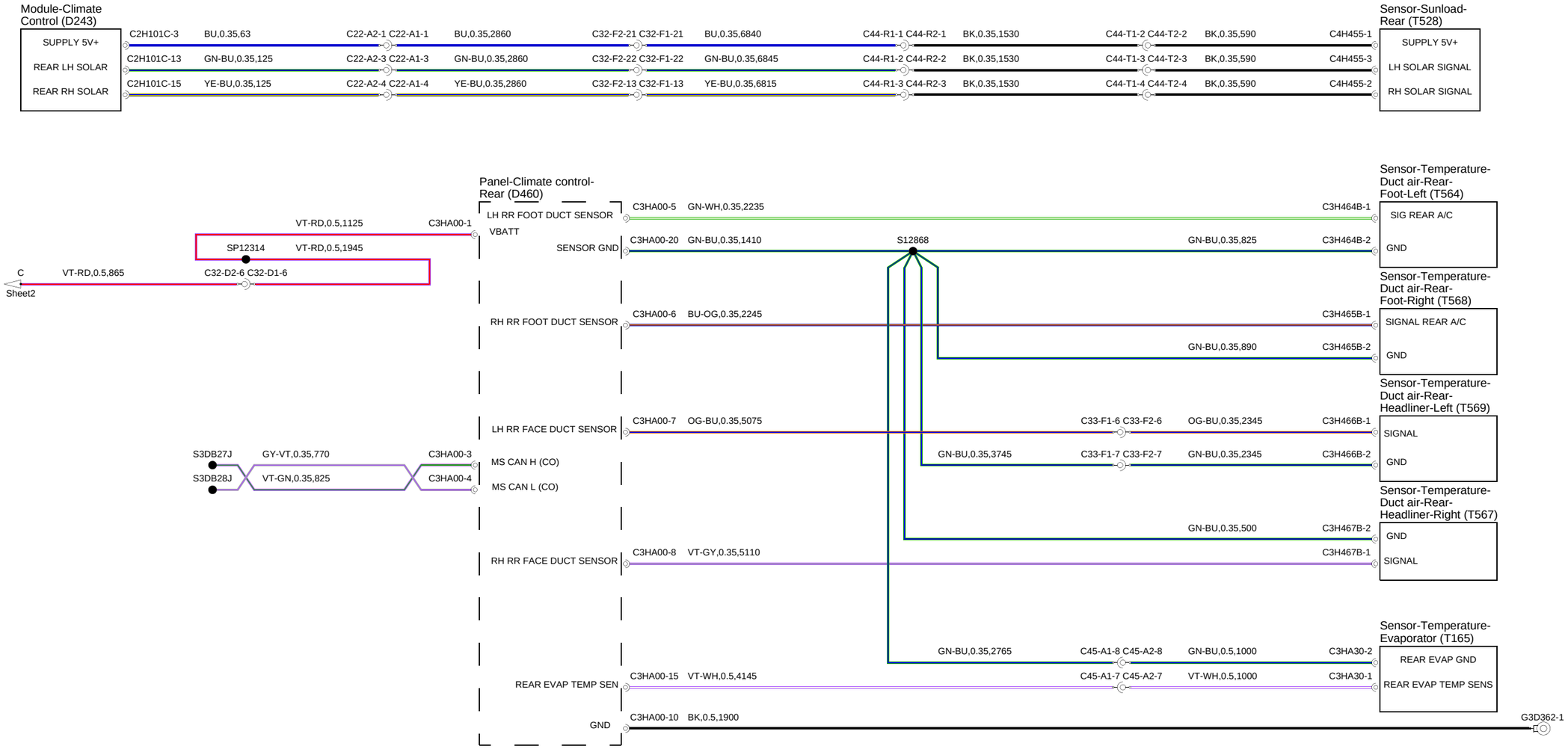
Module-Climate Control (D243)
SUPPLY 5V+
REAR LH SOLAR
REAR RH SOLAR
C2H101C-3 BU,0.35,63 C22-A2-1 C22-A1-1 BU,0.35,2860 C32-F2-21 C32-F1-21 BU,0.35,6840 C44-R1-1 C44-R2-1 BK,0.35,1530 C44-T1-2 C44-T2-2 BK,0.35,590 C4H455-1
C2H101C-13 GN-BU,0.35,125 C22-A2-3 C22-A1-3 GN-BU,0.35,2860 C32-F2-22 C32-F1-22 GN-BU,0.35,6845 C44-R1-2 C44-R2-2 BK,0.35,1530 C44-T1-3 C44-T2-3 BK,0.35,590 C4H455-3
C2H101C-15 YE-BU,0.35,125 C22-A2-4 C22-A1-4 YE-BU,0.35,2860 C32-F2-13 C32-F1-13 YE-BU,0.35,6815 C44-R1-3 C44-R2-3 BK,0.35,1530 C44-T1-4 C44-T2-4 BK,0.35,590 C4H455-2
Sensor-Sunload-Rear (T528)
SUPPLY 5V+
LH SOLAR SIGNAL
RH SOLAR SIGNAL
Panel-Climate control-Rear (D460)
VT-RD,0.5,1125 C3HA00-1
VBATT
SP12314 VT-RD,0.5,1945
C VT-RD,0.5,865 C32-D2-6 C32-D1-6
Sheet2
LH RR FOOT DUCT SENSOR
C3HA00-5 GN-WH,0.35,2235 C3H464B-1
SENSOR GND
C3HA00-20 GN-BU,0.35,1410 S12868 GN-BU,0.35,825 C3H464B-2
Sensor-Temperature-Duct air-Rear-Foot-Left (T564)
SIG REAR A/C
GND
RH RR FOOT DUCT SENSOR
C3HA00-6 BU-OG,0.35,2245 C3H465B-1
GN-BU,0.35,890 C3H465B-2
Sensor-Temperature-Duct air-Rear-Foot-Right (T568)
SIGNAL REAR A/C
GND
LH RR FACE DUCT SENSOR
C3HA00-7 OG-BU,0.35,5075 C33-F1-6 C33-F2-6 OG-BU,0.35,2345 C3H466B-1
GN-BU,0.35,3745 C33-F1-7 C33-F2-7 GN-BU,0.35,2345 C3H466B-2
Sensor-Temperature-Duct air-Rear-Headliner-Left (T569)
SIGNAL
GND
S3DB27J GY-VT,0.35,770 C3HA00-3
MS CAN H (CO)
S3DB28J VT-GN,0.35,825 C3HA00-4
MS CAN L (CO)
GN-BU,0.35,500 C3H467B-2
Sensor-Temperature-Duct air-Rear-Headliner-Right (T567)
GND
RH RR FACE DUCT SENSOR
C3HA00-8 VT-GY,0.35,5110 C3H467B-1
SIGNAL
Sensor-Temperature-Evaporator (T165)
GN-BU,0.35,2765 C45-A1-8 C45-A2-8 GN-BU,0.5,1000 C3HA30-2
REAR EVAP GND
REAR EVAP TEMP SEN
C3HA00-15 VT-WH,0.5,4145 C45-A1-7 C45-A2-7 VT-WH,0.5,1000 C3HA30-1
REAR EVAP TEMP SENS
GND
C3HA00-10 BK,0.5,1900 G3D362-1

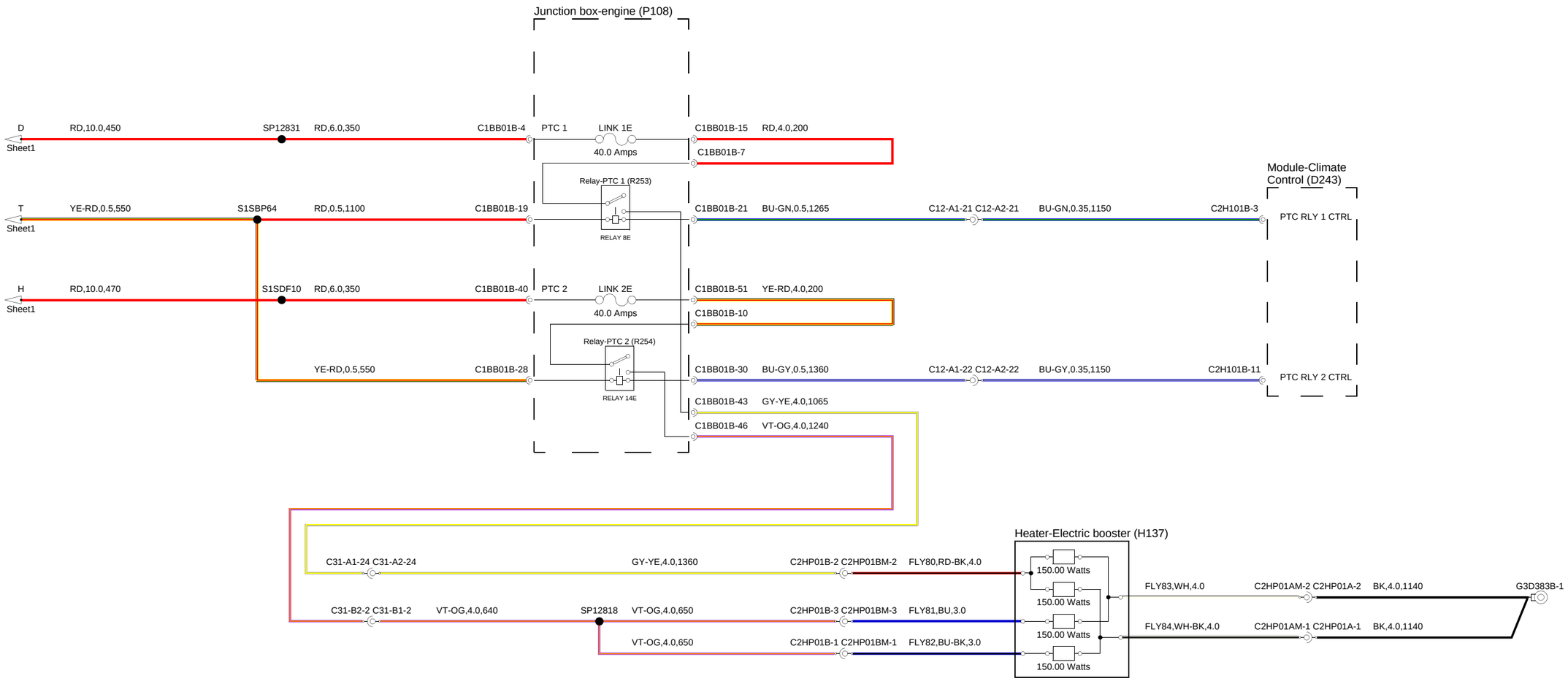
Junction box-engine (P108)
D
Sheet1
RD,10.0,450
SP12831
RD,6.0,350
C1BB01B-4
PTC 1
LINK 1E
40.0 Amps
C1BB01B-15
RD,4.0,200
C1BB01B-7
Relay-PTC 1 (R253)
RELAY 8E
T
Sheet1
YE-RD,0.5,550
S1SBP64
RD,0.5,1100
C1BB01B-19
C1BB01B-21
BU-GN,0.5,1265
C12-A1-21 C12-A2-21
BU-GN,0.35,1150
C2H101B-3
Module-Climate Control (D243)
PTC RLY 1 CTRL
H
Sheet1
RD,10.0,470
S1SDF10
RD,6.0,350
C1BB01B-40
PTC 2
LINK 2E
40.0 Amps
C1BB01B-51
YE-RD,4.0,200
C1BB01B-10
Relay-PTC 2 (R254)
RELAY 14E
YE-RD,0.5,550
C1BB01B-28
C1BB01B-30
BU-GY,0.5,1360
C12-A1-22 C12-A2-22
BU-GY,0.35,1150
C2H101B-11
PTC RLY 2 CTRL
C1BB01B-43
GY-YE,4.0,1065
C1BB01B-46
VT-OG,4.0,1240
Heater-Electric booster (H137)
C31-A1-24 C31-A2-24
GY-YE,4.0,1360
C2HP01B-2 C2HP01BM-2
FLY80,RD-BK,4.0
150.00 Watts
150.00 Watts
150.00 Watts
150.00 Watts
FLY83,WH,4.0
C2HP01AM-2 C2HP01A-2
BK,4.0,1140
G3D383B-1
C31-B2-2 C31-B1-2
VT-OG,4.0,640
SP12818
VT-OG,4.0,650
C2HP01B-3 C2HP01BM-3
FLY81,BU,3.0
FLY84,WH-BK,4.0
C2HP01AM-1 C2HP01A-1
BK,4.0,1140
VT-OG,4.0,650
C2HP01B-1 C2HP01BM-1
FLY82,BU-BK,3.0

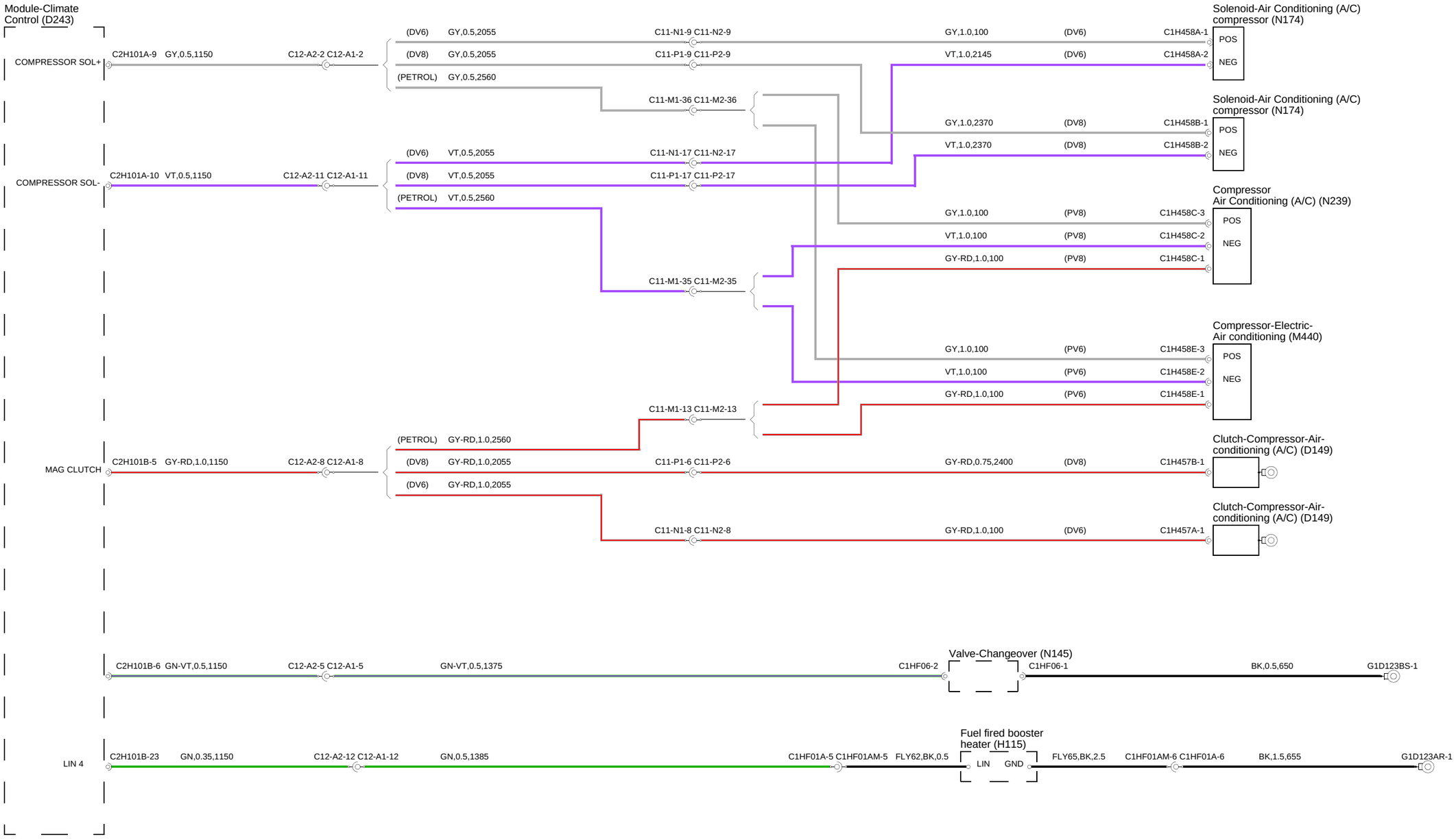
Module-Climate Control (D243)
COMPRESSOR SOL+
C2H101A-9 GY,0.5,1150
C12-A2-2 C12-A1-2
(DV6) GY,0.5,2055
(DV8) GY,0.5,2055
(PETROL) GY,0.5,2560
C11-N1-9 C11-N2-9
C11-P1-9 C11-P2-9
C11-M1-36 C11-M2-36
GY,1.0,100 (DV6) C1H458A-1
VT,1.0,2145 (DV6) C1H458A-2
Solenoid-Air Conditioning (A/C) compressor (N174)
POS
NEG
GY,1.0,2370 (DV8) C1H458B-1
VT,1.0,2370 (DV8) C1H458B-2
Solenoid-Air Conditioning (A/C) compressor (N174)
COMPRESSOR SOL-
C2H101A-10 VT,0.5,1150
C12-A2-11 C12-A1-11
(DV6) VT,0.5,2055
(DV8) VT,0.5,2055
(PETROL) VT,0.5,2560
C11-N1-17 C11-N2-17
C11-P1-17 C11-P2-17
C11-M1-35 C11-M2-35
GY,1.0,100 (PV8) C1H458C-3
VT,1.0,100 (PV8) C1H458C-2
GY-RD,1.0,100 (PV8) C1H458C-1
Compressor Air Conditioning (A/C) (N239)
GY,1.0,100 (PV6) C1H458E-3
VT,1.0,100 (PV6) C1H458E-2
GY-RD,1.0,100 (PV6) C1H458E-1
Compressor-Electric-Air conditioning (M440)
C11-M1-13 C11-M2-13
MAG CLUTCH
C2H101B-5 GY-RD,1.0,1150
C12-A2-8 C12-A1-8
(PETROL) GY-RD,1.0,2560
(DV8) GY-RD,1.0,2055
(DV6) GY-RD,1.0,2055
C11-P1-6 C11-P2-6
GY-RD,0.75,2400 (DV8) C1H457B-1
Clutch-Compressor-Air-conditioning (A/C) (D149)
C11-N1-8 C11-N2-8
GY-RD,1.0,100 (DV6) C1H457A-1
Clutch-Compressor-Air-conditioning (A/C) (D149)
C2H101B-6 GN-VT,0.5,1150
C12-A2-5 C12-A1-5
GN-VT,0.5,1375
C1HF06-2
Valve-Changeover (N145)
C1HF06-1
BK,0.5,650
G1D123BS-1
LIN 4
C2H101B-23 GN,0.35,1150
C12-A2-12 C12-A1-12
GN,0.5,1385
C1HF01A-5 C1HF01AM-5 FLY62,BK,0.5
Fuel fired booster heater (H115)
LIN GND
FLY65,BK,2.5 C1HF01AM-6 C1HF01A-6
BK,1.5,655
G1D123AR-1

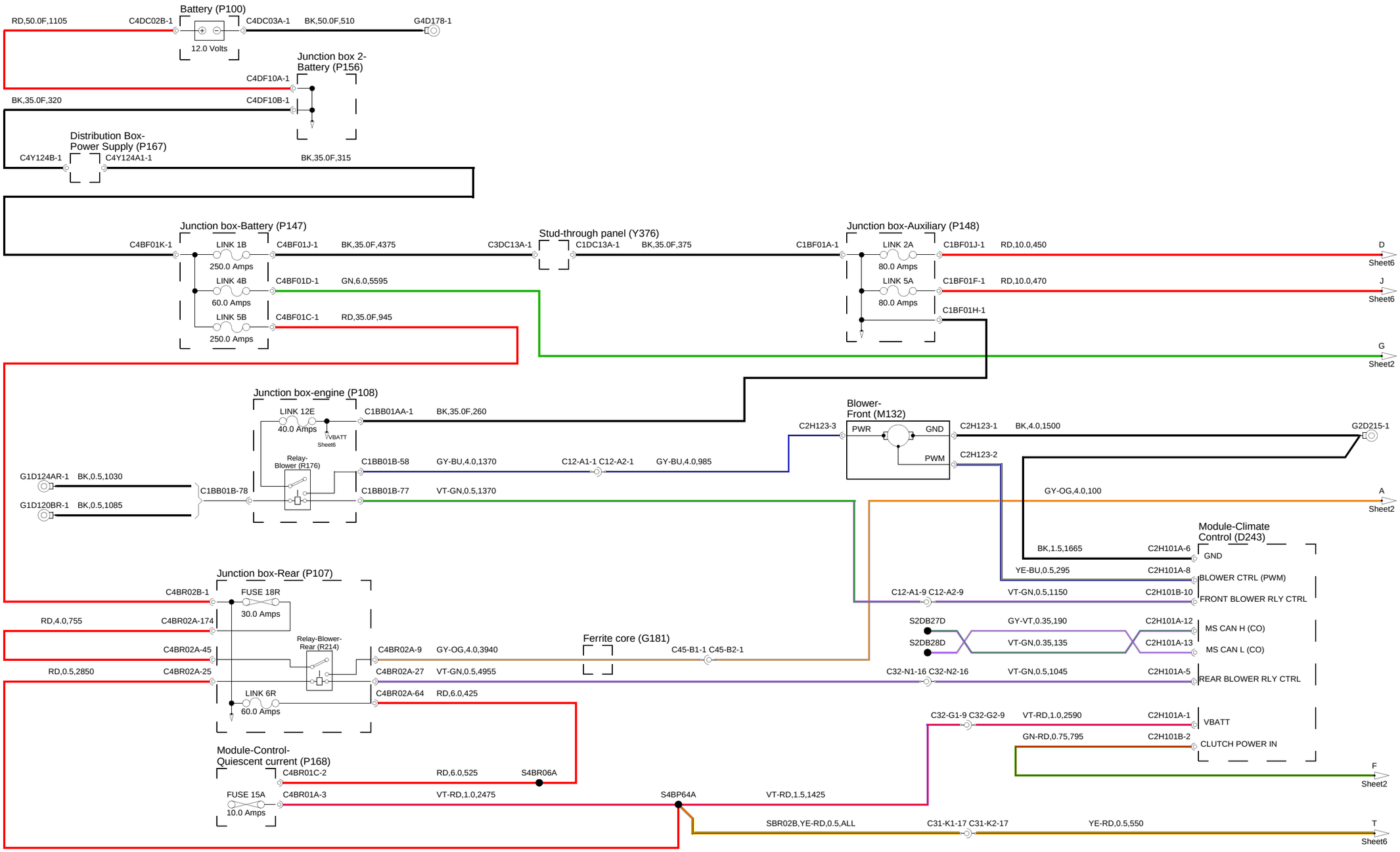
Battery (P100)
RD,50.0F,1105
C4DC02B-1
C4DC03A-1
BK,50.0F,510
G4D178-1
12.0 Volts
Junction box 2-
Battery (P156)
C4DF10A-1
BK,35.0F,320
C4DF10B-1
Distribution Box-
Power Supply (P167)
C4Y124B-1
C4Y124A1-1
BK,35.0F,315
Junction box-Battery (P147)
C4BF01K-1
LINK 1B
250.0 Amps
C4BF01J-1
BK,35.0F,4375
LINK 4B
60.0 Amps
C4BF01D-1
GN,6.0,5595
LINK 5B
250.0 Amps
C4BF01C-1
RD,35.0F,945
Stud-through panel (Y376)
C3DC13A-1
C1DC13A-1
BK,35.0F,375
Junction box-Auxiliary (P148)
C1BF01A-1
LINK 2A
80.0 Amps
C1BF01J-1
RD,10.0,450
D
Sheet6
LINK 5A
80.0 Amps
C1BF01F-1
RD,10.0,470
J
Sheet6
C1BF01H-1
G
Sheet2
Junction box-engine (P108)
LINK 12E
40.0 Amps
VBATT
Sheet6
C1BB01AA-1
BK,35.0F,260
Relay-
Blower (R176)
C1BB01B-58
GY-BU,4.0,1370
C12-A1-1 C12-A2-1
GY-BU,4.0,985
C1BB01B-77
VT-GN,0.5,1370
G1D124AR-1
BK,0.5,1030
G1D120BR-1
BK,0.5,1085
C1BB01B-78
Blower-
Front (M132)
C2H123-3
PWR
GND
PWM
C2H123-1
BK,4.0,1500
G2D215-1
C2H123-2
GY-OG,4.0,100
A
Sheet2
Module-Climate
Control (D243)
BK,1.5,1665
C2H101A-6
GND
YE-BU,0.5,295
C2H101A-8
BLOWER CTRL (PWM)
C12-A1-9 C12-A2-9
VT-GN,0.5,1150
C2H101B-10
FRONT BLOWER RLY CTRL
S2DB27D
GY-VT,0.35,190
C2H101A-12
MS CAN H (CO)
S2DB28D
VT-GN,0.35,135
C2H101A-13
MS CAN L (CO)
C32-N1-16 C32-N2-16
VT-GN,0.5,1045
C2H101A-5
REAR BLOWER RLY CTRL
C32-G1-9 C32-G2-9
VT-RD,1.0,2590
C2H101A-1
VBATT
GN-RD,0.75,795
C2H101B-2
CLUTCH POWER IN
F
Sheet2
Junction box-Rear (P107)
C4BR02B-1
FUSE 18R
30.0 Amps
RD,4.0,755
C4BR02A-174
C4BR02A-45
Relay-Blower-
Rear (R214)
C4BR02A-9
GY-OG,4.0,3940
Ferrite core (G181)
C45-B1-1 C45-B2-1
RD,0.5,2850
C4BR02A-25
C4BR02A-27
VT-GN,0.5,4955
LINK 6R
60.0 Amps
C4BR02A-64
RD,6.0,425
Module-Control-
Quiescent current (P168)
C4BR01C-2
RD,6.0,525
S4BR06A
FUSE 15A
10.0 Amps
C4BR01A-3
VT-RD,1.0,2475
S4BP64A
VT-RD,1.5,1425
SBR02B,YE-RD,0.5,ALL
C31-K1-17 C31-K2-17
YE-RD,0.5,550
T
Sheet6

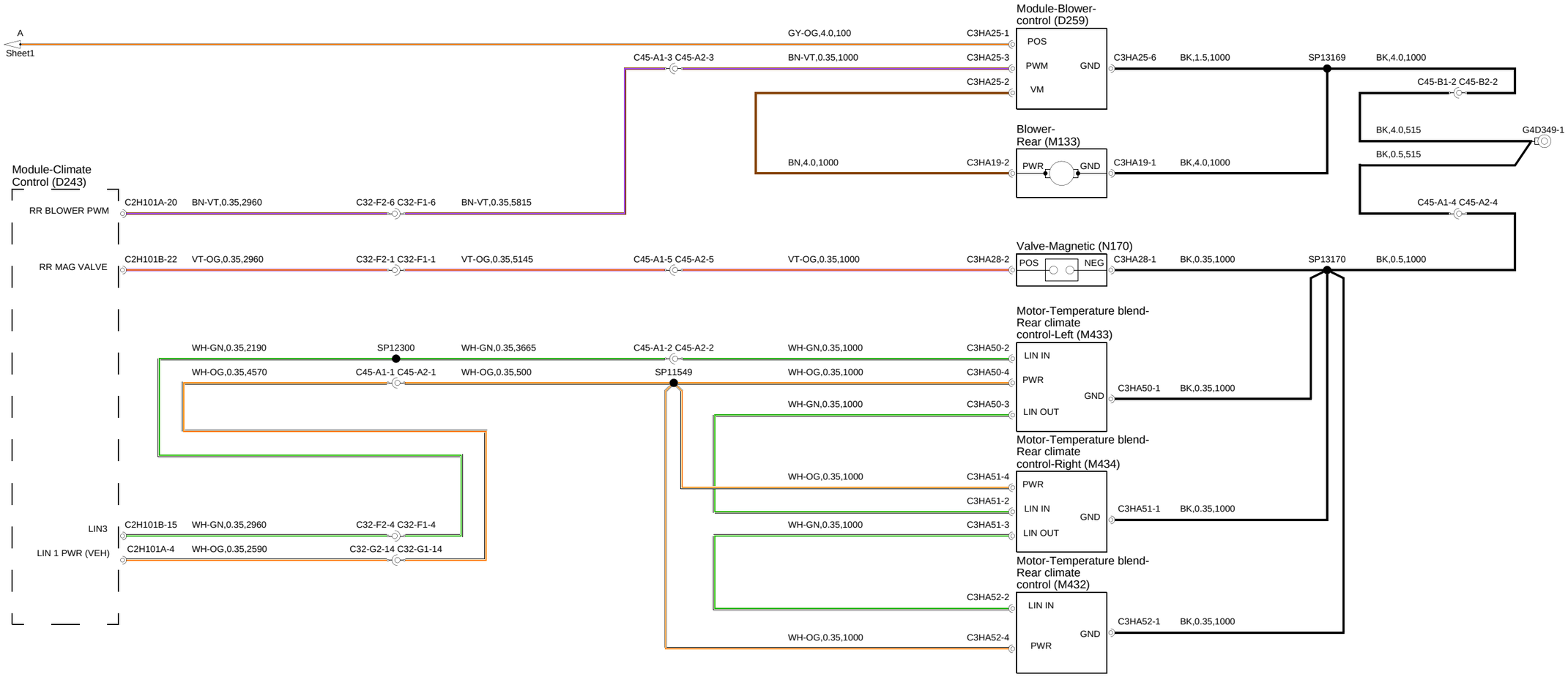
Module-Blower-control (D259)
A
Sheet1
GY-OG,4.0,100
C3HA25-1
POS
PWM
GND
VM
C45-A1-3 C45-A2-3
BN-VT,0.35,1000
C3HA25-3
C3HA25-2
C3HA25-6
BK,1.5,1000
SP13169
BK,4.0,1000
C45-B1-2 C45-B2-2
BK,4.0,515
G4D349-1
BK,0.5,515
Blower-Rear (M133)
BN,4.0,1000
C3HA19-2
PWR
GND
C3HA19-1
BK,4.0,1000
Module-Climate Control (D243)
RR BLOWER PWM
C2H101A-20
BN-VT,0.35,2960
C32-F2-6 C32-F1-6
BN-VT,0.35,5815
C45-A1-4 C45-A2-4
Valve-Magnetic (N170)
RR MAG VALVE
C2H101B-22
VT-OG,0.35,2960
C32-F2-1 C32-F1-1
VT-OG,0.35,5145
C45-A1-5 C45-A2-5
VT-OG,0.35,1000
C3HA28-2
POS
NEG
C3HA28-1
BK,0.35,1000
SP13170
BK,0.5,1000
Motor-Temperature blend-Rear climate control-Left (M433)
WH-GN,0.35,2190
SP12300
WH-GN,0.35,3665
C45-A1-2 C45-A2-2
WH-GN,0.35,1000
C3HA50-2
LIN IN
WH-OG,0.35,4570
C45-A1-1 C45-A2-1
WH-OG,0.35,500
SP11549
WH-OG,0.35,1000
C3HA50-4
PWR
GND
C3HA50-1
BK,0.35,1000
WH-GN,0.35,1000
C3HA50-3
LIN OUT
Motor-Temperature blend-Rear climate control-Right (M434)
WH-OG,0.35,1000
C3HA51-4
PWR
C3HA51-2
LIN IN
GND
C3HA51-1
BK,0.35,1000
LIN3
C2H101B-15
WH-GN,0.35,2960
C32-F2-4 C32-F1-4
WH-GN,0.35,1000
C3HA51-3
LIN OUT
LIN 1 PWR (VEH)
C2H101A-4
WH-OG,0.35,2590
C32-G2-14 C32-G1-14
Motor-Temperature blend-Rear climate control (M432)
C3HA52-2
LIN IN
C3HA52-1
BK,0.35,1000
GND
WH-OG,0.35,1000
C3HA52-4
PWR

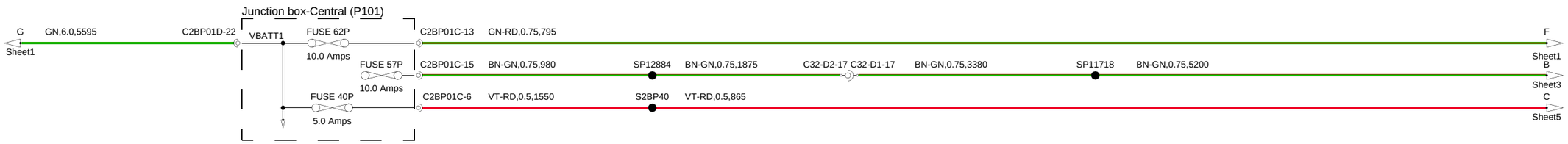
Junction box-Central (P101)
G
Sheet1
GN,6.0,5595
C2BP01D-22
VBATT1
FUSE 62P
10.0 Amps
C2BP01C-13
GN-RD,0.75,795
F
Sheet1
FUSE 57P
10.0 Amps
C2BP01C-15
BN-GN,0.75,980
SP12884
BN-GN,0.75,1875
C32-D2-17 C32-D1-17
BN-GN,0.75,3380
SP11718
BN-GN,0.75,5200
B
Sheet3
FUSE 40P
5.0 Amps
C2BP01C-6
VT-RD,0.5,1550
S2BP40
VT-RD,0.5,865
C
Sheet5

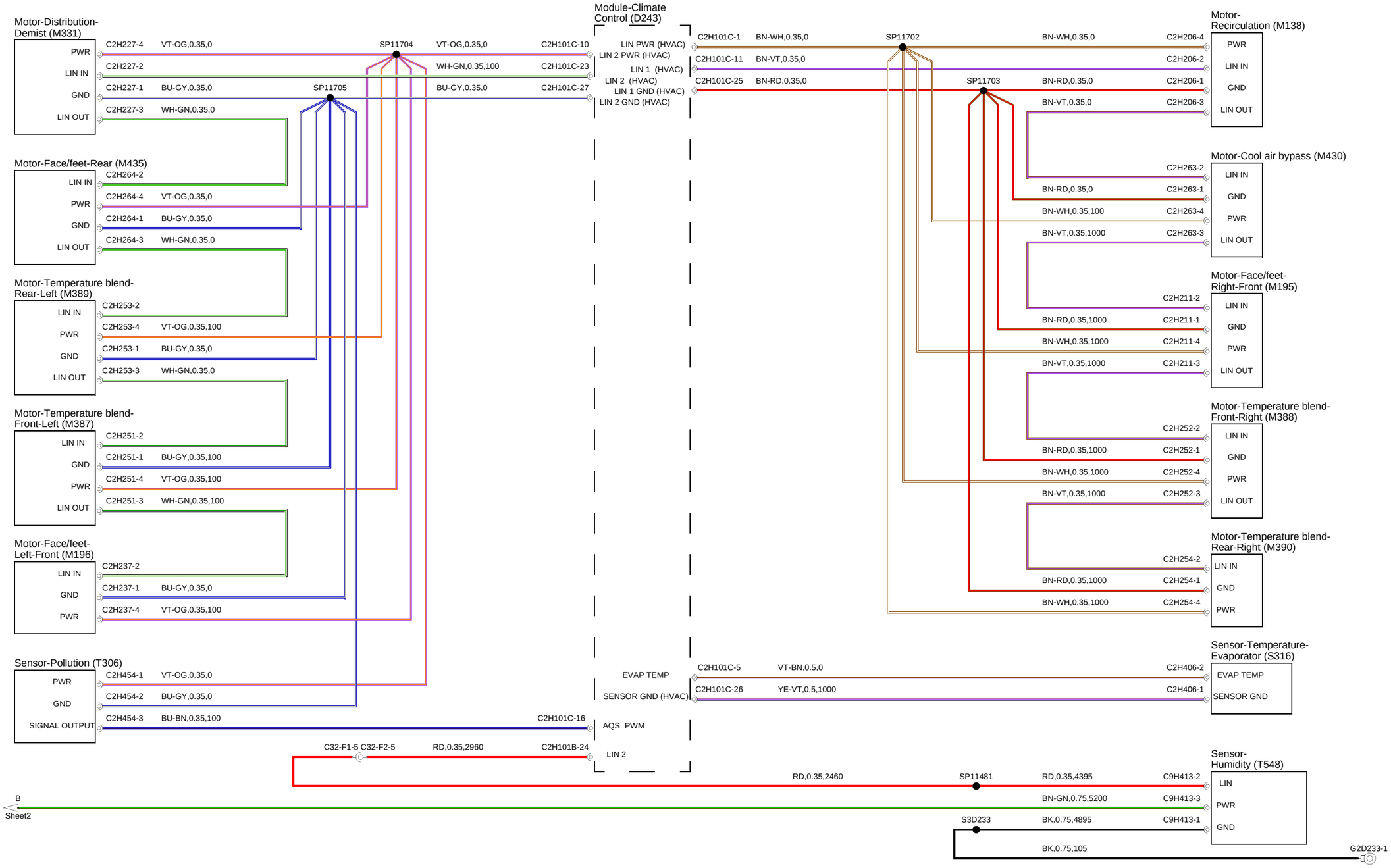
Motor-Distribution-Demist (M331)
PWR
LIN IN
GND
LIN OUT
C2H227-4 VT-OG,0.35,0
C2H227-2
C2H227-1 BU-GY,0.35,0
C2H227-3 WH-GN,0.35,0
SP11704
SP11705
VT-OG,0.35,0 C2H101C-10
WH-GN,0.35,100 C2H101C-23
BU-GY,0.35,0 C2H101C-27
Module-Climate Control (D243)
LIN PWR (HVAC)
LIN 2 PWR (HVAC)
LIN 1 (HVAC)
LIN 2 (HVAC)
LIN 1 GND (HVAC)
LIN 2 GND (HVAC)
C2H101C-1 BN-WH,0.35,0
C2H101C-11 BN-VT,0.35,0
C2H101C-25 BN-RD,0.35,0
SP11702
SP11703
BN-WH,0.35,0 C2H206-4
C2H206-2
BN-RD,0.35,0 C2H206-1
BN-VT,0.35,0 C2H206-3
Motor-Recirculation (M138)
PWR
LIN IN
GND
LIN OUT
Motor-Face/feet-Rear (M435)
LIN IN
PWR
GND
LIN OUT
C2H264-2
C2H264-4 VT-OG,0.35,0
C2H264-1 BU-GY,0.35,0
C2H264-3 WH-GN,0.35,0
C2H263-2
BN-RD,0.35,0 C2H263-1
BN-WH,0.35,100 C2H263-4
BN-VT,0.35,1000 C2H263-3
Motor-Cool air bypass (M430)
LIN IN
GND
PWR
LIN OUT
Motor-Temperature blend-Rear-Left (M389)
LIN IN
PWR
GND
LIN OUT
C2H253-2
C2H253-4 VT-OG,0.35,100
C2H253-1 BU-GY,0.35,0
C2H253-3 WH-GN,0.35,0
C2H211-2
BN-RD,0.35,1000 C2H211-1
BN-WH,0.35,1000 C2H211-4
BN-VT,0.35,1000 C2H211-3
Motor-Face/feet-Right-Front (M195)
LIN IN
GND
PWR
LIN OUT
Motor-Temperature blend-Front-Left (M387)
LIN IN
GND
PWR
LIN OUT
C2H251-2
C2H251-1 BU-GY,0.35,100
C2H251-4 VT-OG,0.35,100
C2H251-3 WH-GN,0.35,100
C2H252-2
BN-RD,0.35,1000 C2H252-1
BN-WH,0.35,1000 C2H252-4
BN-VT,0.35,1000 C2H252-3
Motor-Temperature blend-Front-Right (M388)
LIN IN
GND
PWR
LIN OUT
Motor-Face/feet-Left-Front (M196)
LIN IN
GND
PWR
C2H237-2
C2H237-1 BU-GY,0.35,0
C2H237-4 VT-OG,0.35,100
C2H254-2
BN-RD,0.35,1000 C2H254-1
BN-WH,0.35,1000 C2H254-4
Motor-Temperature blend-Rear-Right (M390)
LIN IN
GND
PWR
Sensor-Pollution (T306)
PWR
GND
SIGNAL OUTPUT
C2H454-1 VT-OG,0.35,0
C2H454-2 BU-GY,0.35,0
C2H454-3 BU-BN,0.35,100
C2H101C-16
EVAP TEMP
SENSOR GND (HVAC)
AQS PWM
C2H101C-5 VT-BN,0.5,0
C2H101C-26 YE-VT,0.5,1000
C2H406-2
C2H406-1
Sensor-Temperature-Evaporator (S316)
EVAP TEMP
SENSOR GND
C32-F1-5 C32-F2-5
RD,0.35,2960
C2H101B-24
LIN 2
RD,0.35,2460
SP11481
RD,0.35,4395 C9H413-2
BN-GN,0.75,5200 C9H413-3
S3D233
BK,0.75,4895 C9H413-1
BK,0.75,105
G2D233-1
Sensor-Humidity (T548)
LIN
PWR
GND
B
Sheet2

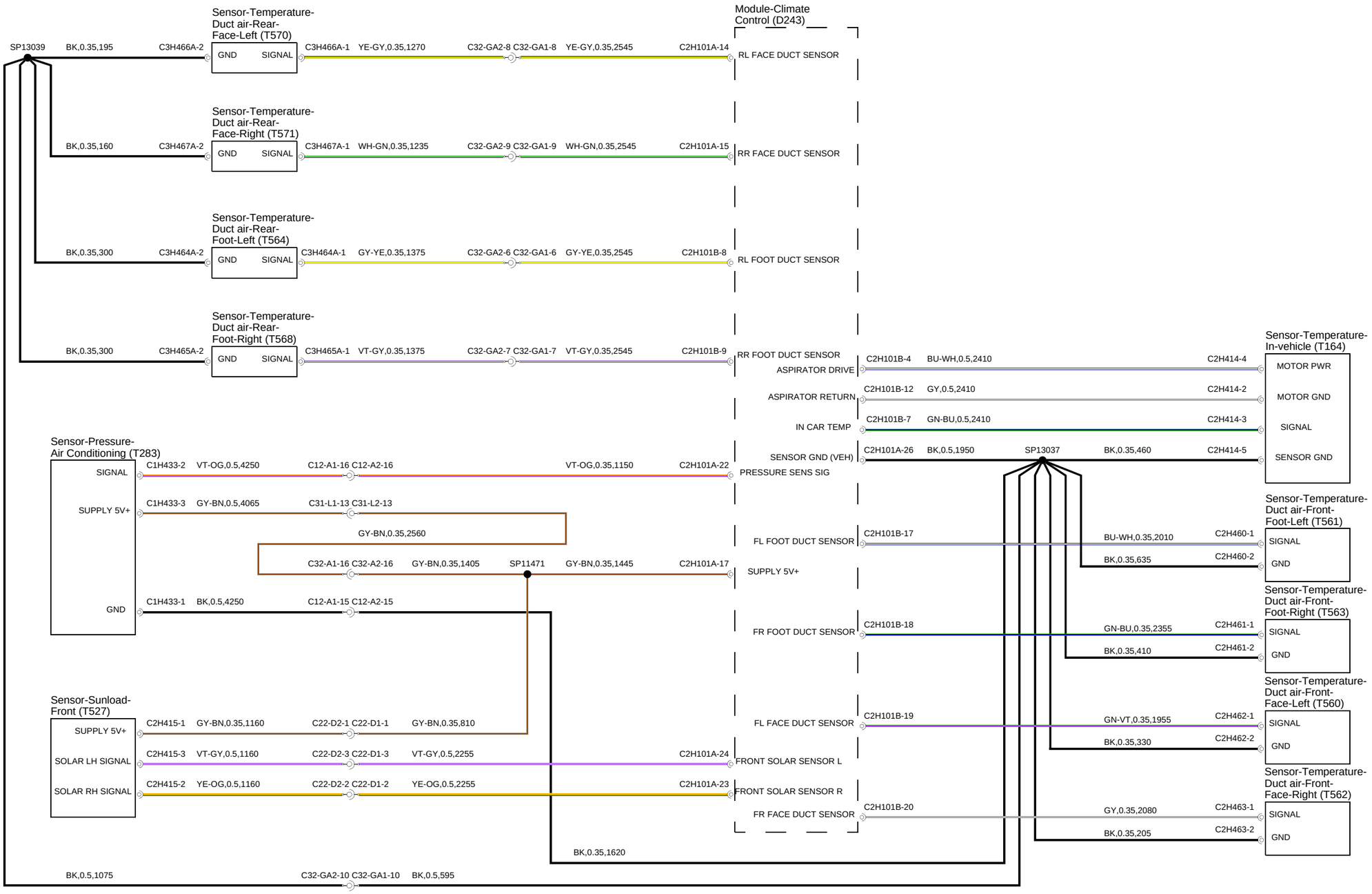
Module-Climate Control (D243)
Sensor-Temperature-Duct air-Rear-Face-Left (T570)
GND
SIGNAL
SP13039
BK,0.35,195
C3H466A-2
C3H466A-1
YE-GY,0.35,1270
C32-GA2-8 C32-GA1-8
YE-GY,0.35,2545
C2H101A-14
RL FACE DUCT SENSOR
Sensor-Temperature-Duct air-Rear-Face-Right (T571)
BK,0.35,160
C3H467A-2
C3H467A-1
WH-GN,0.35,1235
C32-GA2-9 C32-GA1-9
WH-GN,0.35,2545
C2H101A-15
RR FACE DUCT SENSOR
Sensor-Temperature-Duct air-Rear-Foot-Left (T564)
BK,0.35,300
C3H464A-2
C3H464A-1
GY-YE,0.35,1375
C32-GA2-6 C32-GA1-6
GY-YE,0.35,2545
C2H101B-8
RL FOOT DUCT SENSOR
Sensor-Temperature-Duct air-Rear-Foot-Right (T568)
BK,0.35,300
C3H465A-2
C3H465A-1
VT-GY,0.35,1375
C32-GA2-7 C32-GA1-7
VT-GY,0.35,2545
C2H101B-9
RR FOOT DUCT SENSOR
Sensor-Temperature-In-vehicle (T164)
ASPIRATOR DRIVE
C2H101B-4
BU-WH,0.5,2410
C2H414-4
MOTOR PWR
ASPIRATOR RETURN
C2H101B-12
GY,0.5,2410
C2H414-2
MOTOR GND
IN CAR TEMP
C2H101B-7
GN-BU,0.5,2410
C2H414-3
SIGNAL
SENSOR GND (VEH)
C2H101A-26
BK,0.5,1950
SP13037
BK,0.35,460
C2H414-5
SENSOR GND
Sensor-Pressure-Air Conditioning (T283)
SIGNAL
C1H433-2
VT-OG,0.5,4250
C12-A1-16 C12-A2-16
VT-OG,0.35,1150
C2H101A-22
PRESSURE SENS SIG
SUPPLY 5V+
C1H433-3
GY-BN,0.5,4065
C31-L1-13 C31-L2-13
GY-BN,0.35,2560
C32-A1-16 C32-A2-16
GY-BN,0.35,1405
SP11471
GY-BN,0.35,1445
C2H101A-17
SUPPLY 5V+
GND
C1H433-1
BK,0.5,4250
C12-A1-15 C12-A2-15
Sensor-Temperature-Duct air-Front-Foot-Left (T561)
FL FOOT DUCT SENSOR
C2H101B-17
BU-WH,0.35,2010
C2H460-1
BK,0.35,635
C2H460-2
SIGNAL
GND
Sensor-Temperature-Duct air-Front-Foot-Right (T563)
FR FOOT DUCT SENSOR
C2H101B-18
GN-BU,0.35,2355
C2H461-1
BK,0.35,410
C2H461-2
SIGNAL
GND
Sensor-Temperature-Duct air-Front-Face-Left (T560)
FL FACE DUCT SENSOR
C2H101B-19
GN-VT,0.35,1955
C2H462-1
BK,0.35,330
C2H462-2
SIGNAL
GND
Sensor-Sunload-Front (T527)
SUPPLY 5V+
C2H415-1
GY-BN,0.35,1160
C22-D2-1 C22-D1-1
GY-BN,0.35,810
SOLAR LH SIGNAL
C2H415-3
VT-GY,0.5,1160
C22-D2-3 C22-D1-3
VT-GY,0.5,2255
C2H101A-24
FRONT SOLAR SENSOR L
SOLAR RH SIGNAL
C2H415-2
YE-OG,0.5,1160
C22-D2-2 C22-D1-2
YE-OG,0.5,2255
C2H101A-23
FRONT SOLAR SENSOR R
Sensor-Temperature-Duct air-Front-Face-Right (T562)
FR FACE DUCT SENSOR
C2H101B-20
GY,0.35,2080
C2H463-1
BK,0.35,205
C2H463-2
SIGNAL
GND
BK,0.35,1620
BK,0.5,1075
C32-GA2-10 C32-GA1-10
BK,0.5,595

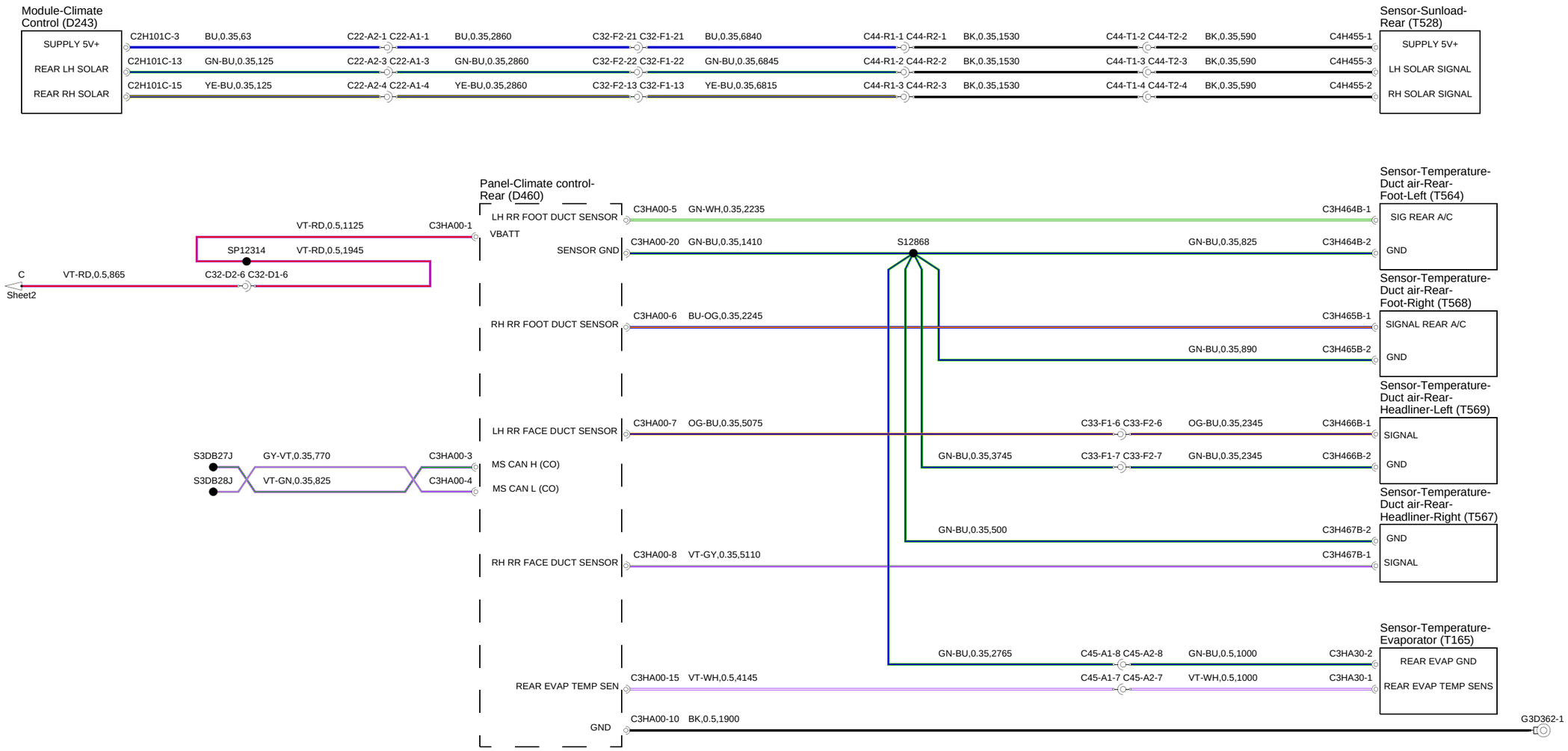
Module-Climate Control (D243)
SUPPLY 5V+
REAR LH SOLAR
REAR RH SOLAR
C2H101C-3 BU,0.35,63 C22-A2-1 C22-A1-1 BU,0.35,2860 C32-F2-21 C32-F1-21 BU,0.35,6840 C44-R1-1 C44-R2-1 BK,0.35,1530 C44-T1-2 C44-T2-2 BK,0.35,590 C4H455-1
C2H101C-13 GN-BU,0.35,125 C22-A2-3 C22-A1-3 GN-BU,0.35,2860 C32-F2-22 C32-F1-22 GN-BU,0.35,6845 C44-R1-2 C44-R2-2 BK,0.35,1530 C44-T1-3 C44-T2-3 BK,0.35,590 C4H455-3
C2H101C-15 YE-BU,0.35,125 C22-A2-4 C22-A1-4 YE-BU,0.35,2860 C32-F2-13 C32-F1-13 YE-BU,0.35,6815 C44-R1-3 C44-R2-3 BK,0.35,1530 C44-T1-4 C44-T2-4 BK,0.35,590 C4H455-2
Sensor-Sunload-Rear (T528)
SUPPLY 5V+
LH SOLAR SIGNAL
RH SOLAR SIGNAL
Panel-Climate control-Rear (D460)
VT-RD,0.5,1125 C3HA00-1
VBATT
SP12314 VT-RD,0.5,1945
C VT-RD,0.5,865 C32-D2-6 C32-D1-6
Sheet2
LH RR FOOT DUCT SENSOR C3HA00-5 GN-WH,0.35,2235 C3H464B-1
SENSOR GND C3HA00-20 GN-BU,0.35,1410 S12868 GN-BU,0.35,825 C3H464B-2
Sensor-Temperature-Duct air-Rear-Foot-Left (T564)
SIG REAR A/C
GND
RH RR FOOT DUCT SENSOR C3HA00-6 BU-OG,0.35,2245 C3H465B-1
GN-BU,0.35,890 C3H465B-2
Sensor-Temperature-Duct air-Rear-Foot-Right (T568)
SIGNAL REAR A/C
GND
LH RR FACE DUCT SENSOR C3HA00-7 OG-BU,0.35,5075 C33-F1-6 C33-F2-6 OG-BU,0.35,2345 C3H466B-1
GN-BU,0.35,3745 C33-F1-7 C33-F2-7 GN-BU,0.35,2345 C3H466B-2
Sensor-Temperature-Duct air-Rear-Headliner-Left (T569)
SIGNAL
GND
S3DB27J GY-VT,0.35,770 C3HA00-3
S3DB28J VT-GN,0.35,825 C3HA00-4
MS CAN H (CO)
MS CAN L (CO)
GN-BU,0.35,500 C3H467B-2
RH RR FACE DUCT SENSOR C3HA00-8 VT-GY,0.35,5110 C3H467B-1
Sensor-Temperature-Duct air-Rear-Headliner-Right (T567)
GND
SIGNAL
GN-BU,0.35,2765 C45-A1-8 C45-A2-8 GN-BU,0.5,1000 C3HA30-2
REAR EVAP TEMP SEN C3HA00-15 VT-WH,0.5,4145 C45-A1-7 C45-A2-7 VT-WH,0.5,1000 C3HA30-1
Sensor-Temperature-Evaporator (T165)
REAR EVAP GND
REAR EVAP TEMP SENS
GND C3HA00-10 BK,0.5,1900 G3D362-1

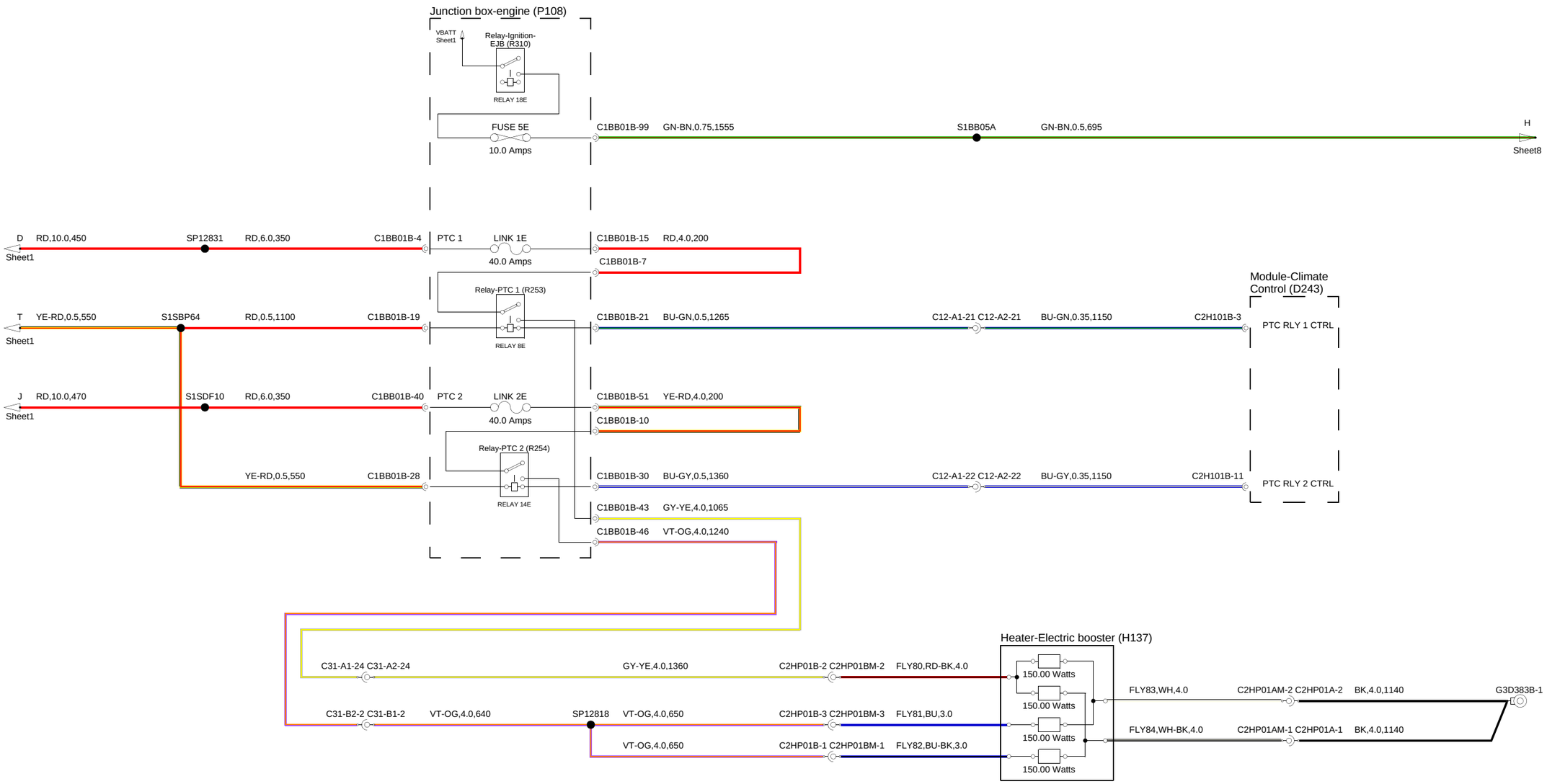
Junction box-engine (P108)
VBATT
Sheet1
Relay-Ignition-EJB (R310)
RELAY 18E
FUSE 5E
10.0 Amps
C1BB01B-99
GN-BN,0.75,1555
S1BB05A
GN-BN,0.5,695
H
Sheet8
D
RD,10.0,450
SP12831
RD,6.0,350
C1BB01B-4
PTC 1
LINK 1E
40.0 Amps
C1BB01B-15
RD,4.0,200
C1BB01B-7
Sheet1
Relay-PTC 1 (R253)
RELAY 8E
Module-Climate Control (D243)
T
YE-RD,0.5,550
S1SBP64
RD,0.5,1100
C1BB01B-19
C1BB01B-21
BU-GN,0.5,1265
C12-A1-21 C12-A2-21
BU-GN,0.35,1150
C2H101B-3
PTC RLY 1 CTRL
Sheet1
J
RD,10.0,470
S1SDF10
RD,6.0,350
C1BB01B-40
PTC 2
LINK 2E
40.0 Amps
C1BB01B-51
YE-RD,4.0,200
C1BB01B-10
Sheet1
Relay-PTC 2 (R254)
RELAY 14E
YE-RD,0.5,550
C1BB01B-28
C1BB01B-30
BU-GY,0.5,1360
C12-A1-22 C12-A2-22
BU-GY,0.35,1150
C2H101B-11
PTC RLY 2 CTRL
C1BB01B-43
GY-YE,4.0,1065
C1BB01B-46
VT-OG,4.0,1240
Heater-Electric booster (H137)
C31-A1-24 C31-A2-24
GY-YE,4.0,1360
C2HP01B-2 C2HP01BM-2
FLY80,RD-BK,4.0
150.00 Watts
150.00 Watts
150.00 Watts
150.00 Watts
FLY83,WH,4.0
C2HP01AM-2 C2HP01A-2
BK,4.0,1140
G3D383B-1
C31-B2-2 C31-B1-2
VT-OG,4.0,640
SP12818
VT-OG,4.0,650
C2HP01B-3 C2HP01BM-3
FLY81,BU,3.0
FLY84,WH-BK,4.0
C2HP01AM-1 C2HP01A-1
BK,4.0,1140
VT-OG,4.0,650
C2HP01B-1 C2HP01BM-1
FLY82,BU-BK,3.0

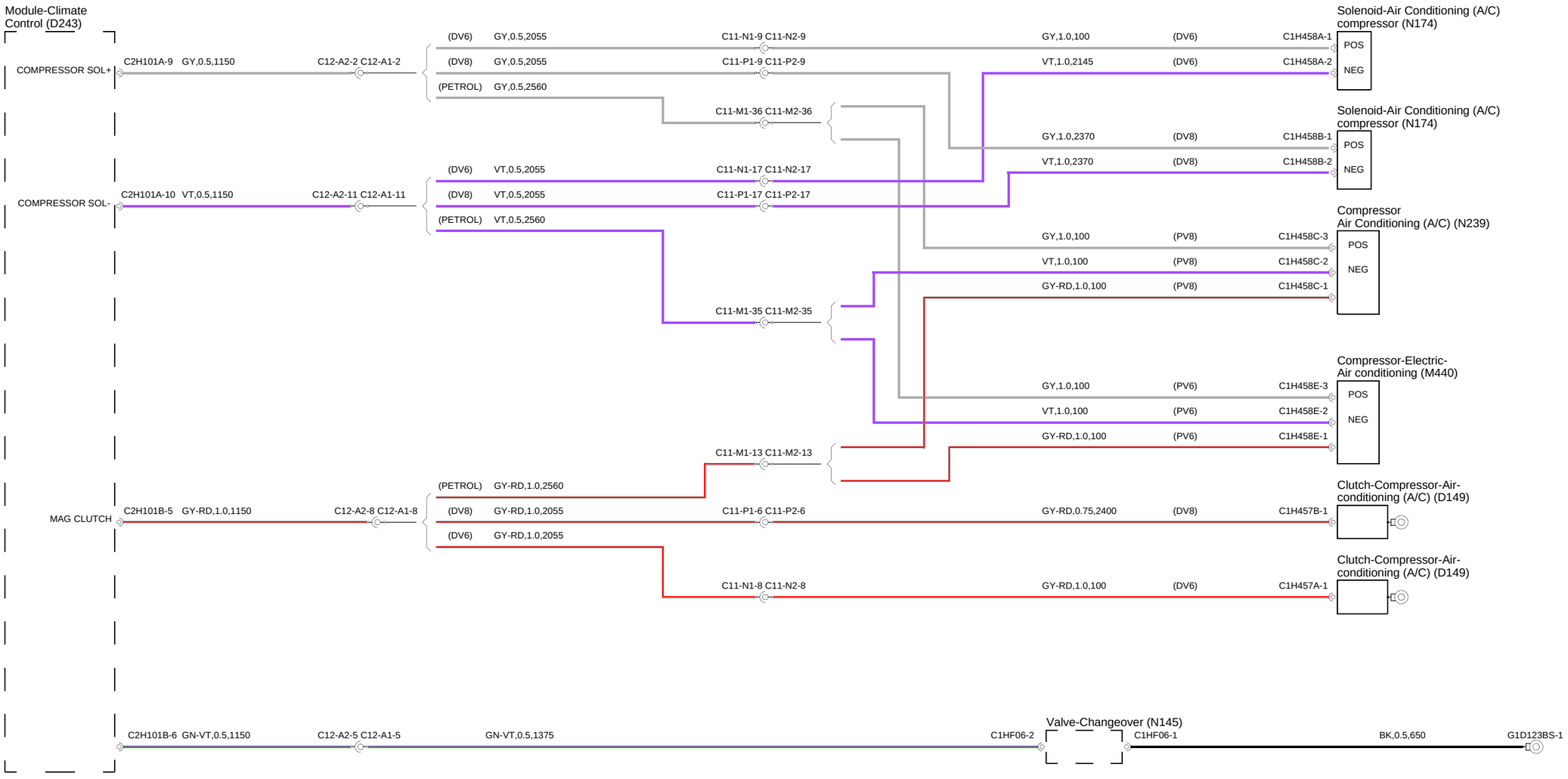
Module-Climate Control (D243)
COMPRESSOR SOL+
C2H101A-9 GY,0.5,1150
C12-A2-2 C12-A1-2
(DV6) GY,0.5,2055
C11-N1-9 C11-N2-9
GY,1.0,100 (DV6) C1H458A-1
(DV8) GY,0.5,2055
C11-P1-9 C11-P2-9
VT,1.0,2145 (DV6) C1H458A-2
(PETROL) GY,0.5,2560
C11-M1-36 C11-M2-36
Solenoid-Air Conditioning (A/C) compressor (N174)
POS
NEG
GY,1.0,2370 (DV8) C1H458B-1
VT,1.0,2370 (DV8) C1H458B-2
Solenoid-Air Conditioning (A/C) compressor (N174)
POS
NEG
COMPRESSOR SOL-
C2H101A-10 VT,0.5,1150
C12-A2-11 C12-A1-11
(DV6) VT,0.5,2055
C11-N1-17 C11-N2-17
(DV8) VT,0.5,2055
C11-P1-17 C11-P2-17
(PETROL) VT,0.5,2560
GY,1.0,100 (PV8) C1H458C-3
VT,1.0,100 (PV8) C1H458C-2
GY-RD,1.0,100 (PV8) C1H458C-1
Compressor Air Conditioning (A/C) (N239)
POS
NEG
C11-M1-35 C11-M2-35
GY,1.0,100 (PV6) C1H458E-3
VT,1.0,100 (PV6) C1H458E-2
GY-RD,1.0,100 (PV6) C1H458E-1
Compressor-Electric-Air conditioning (M440)
POS
NEG
C11-M1-13 C11-M2-13
(PETROL) GY-RD,1.0,2560
MAG CLUTCH
C2H101B-5 GY-RD,1.0,1150
C12-A2-8 C12-A1-8
(DV8) GY-RD,1.0,2055
C11-P1-6 C11-P2-6
GY-RD,0.75,2400 (DV8) C1H457B-1
Clutch-Compressor-Air-conditioning (A/C) (D149)
(DV6) GY-RD,1.0,2055
C11-N1-8 C11-N2-8
GY-RD,1.0,100 (DV6) C1H457A-1
Clutch-Compressor-Air-conditioning (A/C) (D149)
C2H101B-6 GN-VT,0.5,1150
C12-A2-5 C12-A1-5
GN-VT,0.5,1375
C1HF06-2
Valve-Changeover (N145)
C1HF06-1
BK,0.5,650
G1D123BS-1

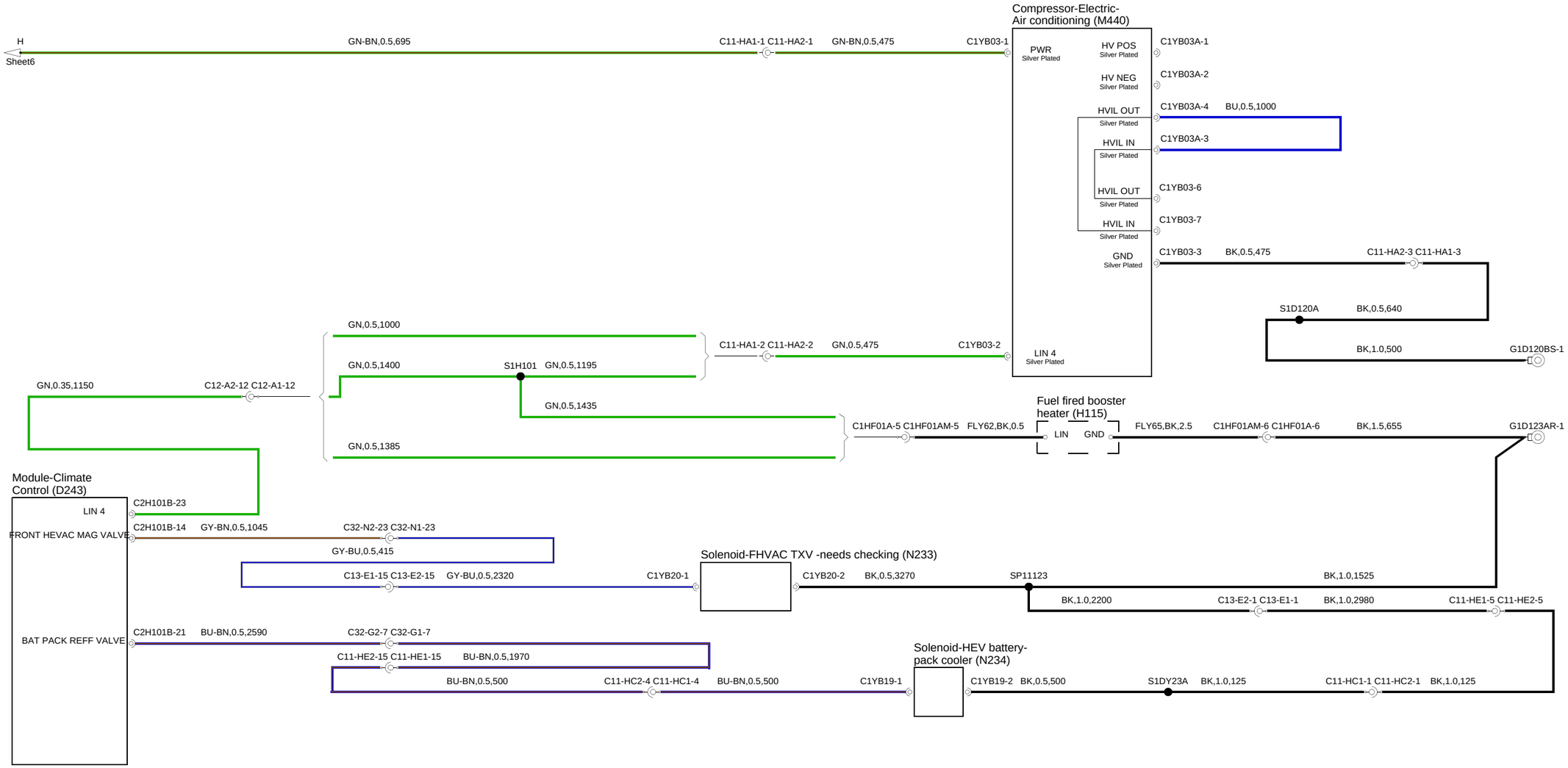
Compressor-Electric-
Air conditioning (M440)
H
Sheet6
GN-BN,0.5,695
C11-HA1-1 C11-HA2-1
GN-BN,0.5,475
C1YB03-1
PWR
Silver Plated
HV POS
Silver Plated
C1YB03A-1
HV NEG
Silver Plated
C1YB03A-2
HVIL OUT
Silver Plated
C1YB03A-4
BU,0.5,1000
HVIL IN
Silver Plated
C1YB03A-3
HVIL OUT
Silver Plated
C1YB03-6
HVIL IN
Silver Plated
C1YB03-7
GND
Silver Plated
C1YB03-3
BK,0.5,475
C11-HA2-3 C11-HA1-3
S1D120A
BK,0.5,640
BK,1.0,500
G1D120BS-1
GN,0.5,1000
C11-HA1-2 C11-HA2-2
GN,0.5,475
C1YB03-2
LIN 4
Silver Plated
GN,0.5,1400
S1H101
GN,0.5,1195
GN,0.35,1150
C12-A2-12 C12-A1-12
GN,0.5,1435
Fuel fired booster
heater (H115)
C1HF01A-5 C1HF01AM-5
FLY62,BK,0.5
LIN
GND
FLY65,BK,2.5
C1HF01AM-6 C1HF01A-6
BK,1.5,655
G1D123AR-1
GN,0.5,1385
Module-Climate
Control (D243)
LIN 4
C2H101B-23
FRONT HEVAC MAG VALVE
C2H101B-14
GY-BN,0.5,1045
C32-N2-23 C32-N1-23
GY-BU,0.5,415
Solenoid-FHVAC TXV -needs checking (N233)
C13-E1-15 C13-E2-15
GY-BU,0.5,2320
C1YB20-1
C1YB20-2
BK,0.5,3270
SP11123
BK,1.0,1525
BK,1.0,2200
C13-E2-1 C13-E1-1
BK,1.0,2980
C11-HE1-5 C11-HE2-5
BAT PACK REFF VALVE
C2H101B-21
BU-BN,0.5,2590
C32-G2-7 C32-G1-7
C11-HE2-15 C11-HE1-15
BU-BN,0.5,1970
Solenoid-HEV battery-
pack cooler (N234)
BU-BN,0.5,500
C11-HC2-4 C11-HC1-4
BU-BN,0.5,500
C1YB19-1
C1YB19-2
BK,0.5,500
S1DY23A
BK,1.0,125
C11-HC1-1 C11-HC2-1
BK,1.0,125

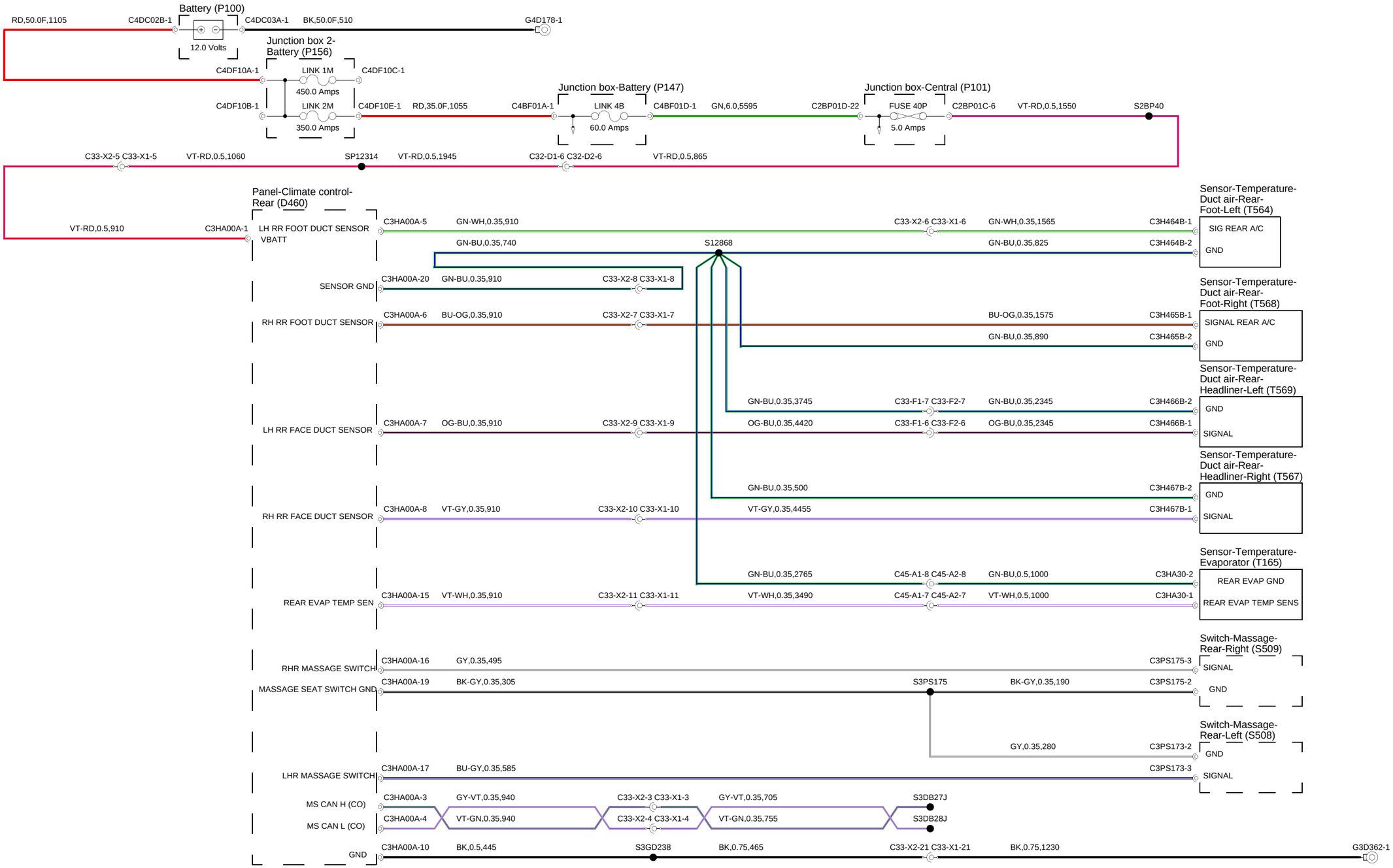
Battery (P100)
RD,50.0F,1105
C4DC02B-1
C4DC03A-1
BK,50.0F,510
G4D178-1
12.0 Volts
Junction box 2-Battery (P156)
C4DF10A-1
LINK 1M
C4DF10C-1
450.0 Amps
C4DF10B-1
LINK 2M
C4DF10E-1
RD,35.0F,1055
350.0 Amps
Junction box-Battery (P147)
C4BF01A-1
LINK 4B
C4BF01D-1
GN,6.0,5595
60.0 Amps
Junction box-Central (P101)
C2BP01D-22
FUSE 40P
C2BP01C-6
VT-RD,0.5,1550
S2BP40
5.0 Amps
C33-X2-5 C33-X1-5
VT-RD,0.5,1060
SP12314
VT-RD,0.5,1945
C32-D1-6 C32-D2-6
VT-RD,0.5,865
Panel-Climate control-Rear (D460)
VT-RD,0.5,910
C3HA00A-1
LH RR FOOT DUCT SENSOR
VBATT
C3HA00A-5
GN-WH,0.35,910
C33-X2-6 C33-X1-6
GN-WH,0.35,1565
C3H464B-1
Sensor-Temperature-Duct air-Rear-Foot-Left (T564)
SIG REAR A/C
GND
GN-BU,0.35,740
S12868
GN-BU,0.35,825
C3H464B-2
SENSOR GND
C3HA00A-20
GN-BU,0.35,910
C33-X2-8 C33-X1-8
RH RR FOOT DUCT SENSOR
C3HA00A-6
BU-OG,0.35,910
C33-X2-7 C33-X1-7
BU-OG,0.35,1575
C3H465B-1
Sensor-Temperature-Duct air-Rear-Foot-Right (T568)
SIGNAL REAR A/C
GND
GN-BU,0.35,890
C3H465B-2
GN-BU,0.35,3745
C33-F1-7 C33-F2-7
GN-BU,0.35,2345
C3H466B-2
Sensor-Temperature-Duct air-Rear-Headliner-Left (T569)
GND
SIGNAL
LH RR FACE DUCT SENSOR
C3HA00A-7
OG-BU,0.35,910
C33-X2-9 C33-X1-9
OG-BU,0.35,4420
C33-F1-6 C33-F2-6
OG-BU,0.35,2345
C3H466B-1
GN-BU,0.35,500
C3H467B-2
Sensor-Temperature-Duct air-Rear-Headliner-Right (T567)
GND
SIGNAL
RH RR FACE DUCT SENSOR
C3HA00A-8
VT-GY,0.35,910
C33-X2-10 C33-X1-10
VT-GY,0.35,4455
C3H467B-1
GN-BU,0.35,2765
C45-A1-8 C45-A2-8
GN-BU,0.5,1000
C3HA30-2
Sensor-Temperature-Evaporator (T165)
REAR EVAP GND
REAR EVAP TEMP SENS
REAR EVAP TEMP SEN
C3HA00A-15
VT-WH,0.35,910
C33-X2-11 C33-X1-11
VT-WH,0.35,3490
C45-A1-7 C45-A2-7
VT-WH,0.5,1000
C3HA30-1
RHR MASSAGE SWITCH
C3HA00A-16
GY,0.35,495
C3PS175-3
Switch-Massage-Rear-Right (S509)
SIGNAL
MASSAGE SEAT SWITCH GND
C3HA00A-19
BK-GY,0.35,305
S3PS175
BK-GY,0.35,190
C3PS175-2
GND
GY,0.35,280
C3PS173-2
Switch-Massage-Rear-Left (S508)
GND
LHR MASSAGE SWITCH
C3HA00A-17
BU-GY,0.35,585
C3PS173-3
SIGNAL
MS CAN H (CO)
C3HA00A-3
GY-VT,0.35,940
C33-X2-3 C33-X1-3
GY-VT,0.35,705
S3DB27J
MS CAN L (CO)
C3HA00A-4
VT-GN,0.35,940
C33-X2-4 C33-X1-4
VT-GN,0.35,755
S3DB28J
GND
C3HA00A-10
BK,0.5,445
S3GD238
BK,0.75,465
C33-X2-21 C33-X1-21
BK,0.75,1230
G3D362-1